DATASHEET

5MP HD Intelligent Light and Audible Warning Fixed Eyeball Network Camera

IPC3635SS-ADF28(40)KMC-I1



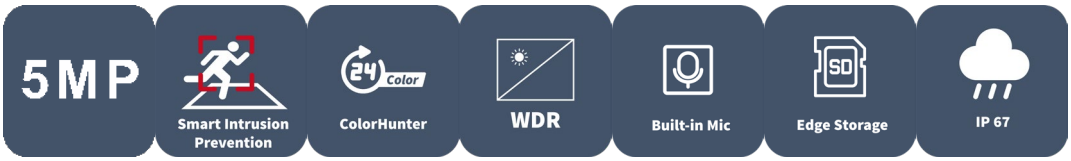

Features

- High quality image with 5MP, 1/2.7"CMOS sensor
- 5MP (2880*1620)@ 30/25(default)fps; 4MP (2560*1440)@ 30/25fps; 3MP (2304*1296) @30/25fps; 2MP (1920*1080) @30/25fps
- Ultra 265, H.265, H.264, MJPEG
- Intelligent perimeter protection, include cross line, intrusion, enter area, leave area detection
- Based on target classification, smart intrusion prevention significantly reduce false alarm caused by leaves, birds and lights etc., accurately focus on human and, motor vehicle and non-motor vehicle
- Intelligent People Flow Counting and Crowd Density Monitoring
- Smart intrusion prevention with Color retrieval
- Auto Scene Match (ASM)（Only WDR）
- 130dB true WDR technology enables clear image in strong light scene
- Support red & blue warning light
- Support 9:16 Corridor Mode
- Alarm:1 in/1 out, Audio: 1 in/1 out, Built-in Mic and Speaker

- Smart IR, up to 30m (98.4 ft) IR distance
- Supports 512 G Micro SD card
- IP67 protection
- ●

Specifications

Camera	Description
Max Resolution	5MP
Sensor	1/2.7" CMOS
Min. Illumination	Colour: 0.001 lux (F1.0, AGC ON) 0 Lux with light
Day/Night	IR-cut filter with auto switch (ICR)
Shutter	Auto/Manual, 1 ~ 1/100000s
Adjustment Angle	Pan: 0° ~ 360°, Tilt: 0° ~ 80°, Rotate: 0° ~ 360°
S/N	>56dB
WDR	130dB
Lens	**Description**
Focal Length	IPC3635SS-ADF28KMC-I1:2.8mm IPC3635SS-ADF40KMC-I1:4.0mm
Iris Type	Fixed
Iris	F1.0
Field of View (H)	IPC3635SS-ADF28KMC-I1:112.8° IPC3635SS-ADF40KMC-I1:91.2°
Field of View (V)	IPC3635SS-ADF28KMC-I1:59.4° IPC3635SS-ADF40KMC-I1:51.0°
Field of View (D)	IPC3635SS-ADF28KMC-I1:116.3° IPC3635SS-ADF40KMC-I1:96.9
DORI	**Description**
DORI Distance(Lens)	IPC3635SS-ADF28KMC-I1:2.8mm IPC3635SS-ADF40KMC-I1:4.0mm
DORI Distance(Detect)	IPC3635SS-ADF28KMC-I1:63.0m(206.7ft) IPC3635SS-ADF40KMC-I1:90.0m(295.2ft)

DORI Distance(Observe)	IPC3635SS-ADF28KMC-I1:25.2m(82.7ft) IPC3635SS-ADF40KMC-I1:36.0m(118.1ft)
DORI Distance(Recognize)	IPC3635SS-ADF28KMC-I1:12.6m(41.3ft) IPC3635SS-ADF40KMC-I1:18.0m(59.1ft)
DORI Distance(Identify)	IPC3635SS-ADF28KMC-I1:6.3m(20.7ft) IPC3635SS-ADF40KMC-I1:9.0m(29.5ft)
Illuminator	Description
Supplemental Light	Dual Light
Illumination Distance(IR)	IR 30m, Warm Light 30m
Illumination Distance(Warm Light)	IR 30m, Warm Light 30m
IR On/Off Control	Auto/Manual
Wavelength	850nm
Light On/Off Control	Auto/Manual
Video	Description
Video Compression	Ultra 265; H.265; H.264; MJPEG
H.264 Code Profile	Baseline profile, Main profile, High profile
Frame Rate	Main Stream:5MP (2880*1620), Max 30fps; 4MP (2560*1440), Max 30fps; 3MP (2304*1296), Max 30fps; 1080P (1920*1080), Max 30fps; 720P (1280*720), Max 30fps; Sub Stream: 1080P (1920*1080), Max 30fps; 720P (1280*720), Max 30fps; D1 (720*576), Max 30fps; 640*360, Max 30fps; 2CIF(704*288), Max 30fps; CIF(352*288), Max 30fps; Third Stream: D1 (720*576), Max 30fps; 640*360,Max 30fps; 2CIF(704*288), Max 30fps; CIF(352*288), Max 30fps;
Video Bit Rate	128 Kbps ~ 16 Mbps
U-code	Support
OSD	Up to 8 OSDs
Privacy Mask	Up to 4 areas
ROI	Up to 8 areas
Video Stream	Triple Streams
Image	Description
Auto Scene Match (ASM)	Support (Only WDR)
White Balance	Auto; Outdoor; Fine Tune; Sodium Lamp; Locked; Auto2
Digital Noise Reduction	2D/3D DNR
Smart IR	Support

Flip	Normal; Vertical; Horizontal; 180°; 90°Clockwise; 90°Anti-clockwise
Dewarping	N/A
HLC	Support
BLC	Support
Defog	Digital Defog
Intelligent	Description
Smart Intrusion Prevention	Support False Alarm Filtering: Cross Line Detection, Intrusion Detection, Enter Area Detection, Leave Area Detection
Statistical Analysis	People Counting; support people flow counting and crowd density monitoring
Attribute Collection	SIP with color retrieval
Events	Description
Basic Detection	Motion Detection; Ultra Motion Detection; Tampering Alarm; Audio Detection
General Function	Watermark; IP Address Filtering; Access Policy; ARP Protection; RTSP Authentication; User Authentication; HTTP Authentication; Alarm Input; Alarm Output
Audio	Description
Audio Compression	G.711U; G.711A
Audio Bitrate	64 Kbps
Two-way Audio	Support
Suppression	Support
Sampling Rate	8KHZ
Storage	Description
Edge Storage	Micro SD, up to 512 GB
Network Storage	ANR; NAS (NFS)
Network	Description
Protocols	IPv4; IPv6; IGMP; ICMP; ARP; TCP; UDP; DHCP; PPPoE; RTP; RTSP; RTCP; RTMP; DNS; DDNS; NTP; FTP; UPnP; HTTP; HTTPS; SMTP; 802.1x; SNMP; QoS; SSL/TLS; SSH
Compatible Integration	ONVIF (Profile S, Profile G, Profile T); API; SDK
User/Host	Up to 32 users. 3 user levels: administrator, common user and operator
Security	Password Protection; Strong Password; HTTPS Encryption; Export Operation Logs; Basic and digest authentication for RTSP; Digest authentication for HTTP; TLS 1.2; WSSE and digest authentication for ONVIF
Client	UNV-Link; UNV-Link Pro; EZStation

Web Browser	Plug-in required live view: IE 10 and above, Chrome 45 and above, Firefox 52 and above, Edge 79 and above; Plug-in free live view: Chrome 57.0 and above, Firefox 58.0 and above, Edge 16 and above
Interface	Description
Audio I/O	1 Input: impedance 35kΩ; amplitude 2V [p-p]; 1 Output: impedance 600Ω; amplitude 2V [p-p]
Alarm I/O	1/1
Serial Port	N/A
Built-in Mic	Support
Built-in Speaker	Support
WIFI	N/A
Network	1 x RJ45 10M/100M Base-TX Ethernet
Video Output	N/A
Certification	Description
EMC	CE-EMC (EN 55032, EN 61000-3-3, EN IEC 61000-3-2, EN 50130) FCC (FCC 47 CFR part15 B)
Safety	CE-LVD (EN 62368-1) CB (IEC 62368-1) UL/CUL (UL 62368-1, CAN/CSA C22.2 No. 62368-1)
Environment	CE-RoHS (2011/65/EU;(EU)2015/863); WEEE (2012/19/EU)
Protection	IP67 (IEC 60529)
General	Description
Power	DC 12V±25%, PoE (IEEE 802.3af) Power consumption: Max 10.0W
Power Interface	Ø 5.5mm coaxial power plug
Dimensions	Φ129 x 118mm (Ø5.1” x 4.7”)
Weight	0.69kg (1.53lb)
Material	Metal
Working Environment	-30 °C ~ 60 °C (-22 °F ~ 140 °F), Humidity: ≤95% RH (non-condensing)
Storage Environment	-30 °C ~ 60 °C (-22 °F ~ 140 °F), Humidity: ≤95% RH (non-condensing)
Surge Protection	4KV
Reset Button	Support
Web Client Language	20 Languages Traditional Chinese, English, Simplified Chinese, Polish, German, Russian, French, Korean,

	Dutch, Czech, Portuguese (Europe), Portuguese (Brazil), Japanese, Thai, Turkish, Spanish (Latin America), Spanish (Europe), Hungarian, Italian, Vietnamese

Dimensions

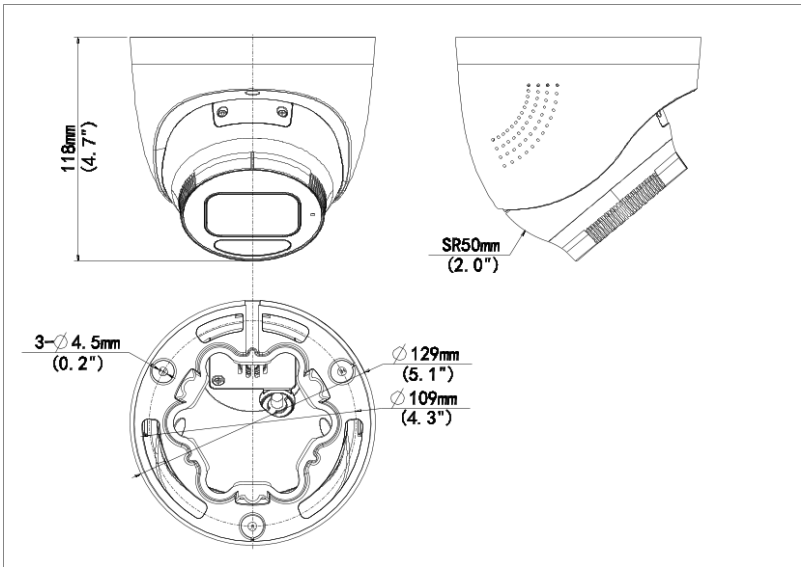

Accessories

TR-JB03-H-IN

Junction Box for Metal Turret Camera(Support wiring from behind)



TR-JB07/WM03-F-IN

Wall Mounting Assembling Bracket with Back Hole for 3 Inch Hemisphere

TR-WM03-B-IN

Wall Mounting Assembling Bracket for 3 Inch Hemisphere



TR-UP06-IN

Universal Pole Mounting Bracket



TR-UC08-C

Bullet&Dome Corner Mounting Bracket



TR-SE24-IN

Dome Pendent Mounting Pole 200mm



TR-SE24-A-IN

Dome Pendent Mounting Pole 500mm

TR-CM24-IN

Dome Pendent Mounting Bracket(Indoor)



Zhejiang Uniview Technologies Co., Ltd.

No. 369, Xietong Road, Xixing Sub-district, Binjiang District, Hangzhou City, 310051, Zhejiang Province, China

Email: overseasbusiness@uniview.com; globalsupport@uniview.com

http://www.uniview.com

©2023-2024 Zhejiang Uniview Technologies Co., Ltd. All rights reserved.

*Product specifications and availability are subject to change without notice.

*Despite our best efforts, technical or typographical errors may exist in this document. Uniview cannot be held responsible for any such errors and reserves the right to change the contents of this document without prior notice.