PORTUGAL

EN

MSMF-LOOP

INSTALLER AND USER'S MANUAL

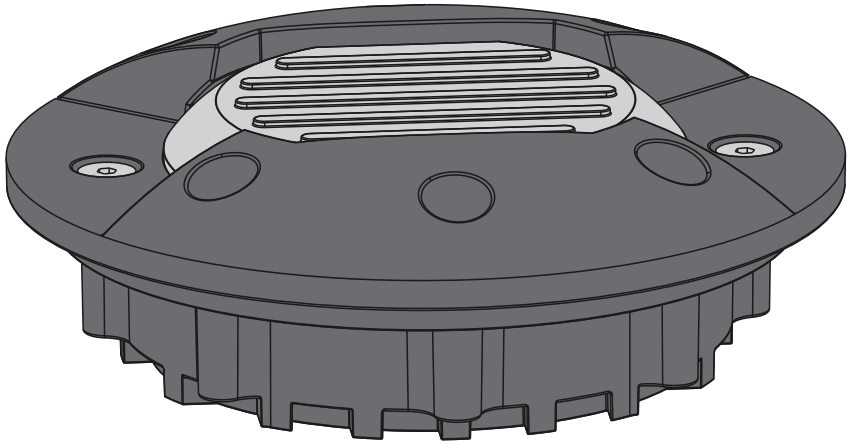

Motorline® PROFESSIONAL

v1.5
REV.07/2026

00. CONTENT

INDEX

01. SAFETY WARNINGS 1B

02. MSMF-LOOP
- GENERAL DESCRIPTION 4A
- DIMENSIONS 4B
- TECHNICAL CHARACTERISTICS 5A

03. INSTALLATION
- MSMF-LOOP INSTALLATION 6A
- MSMF-LOOP-RMP INSTALLATION 6B
- INSTALLATION MODES 7A

04. PROGRAMMING
- ACTIVATE PROGRAMMING MODE 9B
- SELECT FREQUENCY 10A
- PAIRING (JOIN MODE) 10B
- DEVICE RESET 10B

01. SAFETY WARNINGS

CE	This product is certified in accordance with European Community (EC) safety standards.
RoHS	This product complies with Directive 2011/65/EU of the European Parliament and of the Council, of 8 June 2011, on the restriction of the use of certain hazardous substances in electrical and electronic equipment and with Delegated Directive (EU) 2015/863 from Commission.
	(Applicable in countries with recycling systems). This marking on the product or literature indicates that the product and electronic accessories (eg. Charger, USB cable, electronic material, controls, etc.) should not be disposed of as other household waste at the end of its useful life. To avoid possible harm to the environment or human health resulting from the uncontrolled disposal of waste, separate these items from other types of waste and recycle them responsibly to promote the sustainable reuse of material resources. Home users should contact the dealer where they purchased this product or the National Environment Agency for details on where and how they can take these items for environmentally safe recycling. Business users should contact their vendor and check the terms and conditions of the purchase agreement. This product and its electronic accessories should not be mixed with other commercial waste.
	This marking indicates that batteries should not be discarded like other household waste at the end of their useful life. Batteries must be delivered to selective collection points for recycling.
	The different types of packaging (cardboard, plastic, etc.) must be subject to selective collection for recycling. Separate packaging and recycle it responsibly.
	This marking indicates that the product and electronic accessories (eg. charger, USB cable, electronic material, controls, etc.) are susceptible to electric shock by direct or indirect contact with electricity. Be cautious when handling the product and observe all safety procedures in this manual.

01. SAFETY WARNINGS

GENERAL WARNINGS

- This manual contains very important safety and usage information. Read all instructions carefully before beginning the installation/usage procedures and keep this manual in a safe place that it can be consulted whenever necessary.
- This product is intended for use only as described in this manual. Any other enforcement or operation that is not mentioned is expressly prohibited, as it may damage the product and put people at risk causing serious injuries.
- This manual is intended firstly for specialized technicians, and does not invalidate the user's responsibility to read the "User Norms" section in order to ensure the correct functioning of the product.
- The installation and repair of this product may be done by qualified and specialized technicians, to assure every procedure are carried out in accordance with applicable rules and norms. Nonprofessional and inexperienced users are expressly prohibited of taking any action, unless explicitly requested by specialized technicians to do so.
- Installations must be frequently inspected for unbalance and the wear signals of the cables, springs, hinges, wheels, supports and other mechanical assembly parts.
- Do not use the product if it is necessary repair or adjustment is required.
- When performing maintenance, cleaning and replacement of parts, the product must be disconnected from power supply. Also including any operation that requires opening the product cover.
- The use, cleaning and maintenance of this product may be carried out by any persons aged eight years old and over and persons whose physical, sensorial or mental capacities are lower, or by persons without any knowledge of the product, provided that these are supervision and instructions given by persons with experienced in terms of usage of the product in a safe manner and who understands the risks and dangers involved.
- Children shouldn't play with the product or opening devices to avoid the motorized door or gate from being triggered involuntarily.
- If the power cable is damaged, it must be replaced by the manufacturer, after-sales service or similarly qualified personnel to avoid danger.
- The device must be disconnected from the electrical network when removing the battery.
- Ensure that blocking is avoided between the actuated part and its fixed parts due to the opening movement of the actuated part.

WARNINGS FOR TECHNICIANS

- Before beginning the installation procedures, make sure that you have all the devices and materials necessary to complete the installation of the product.
- You should note your Protection Index (IP) and operating temperature to ensure that is suitable for the installation site.
- Provide the manual of the product to the user and let them know how to handle it in an emergency.
- If the automatism is installed on a gate with a pedestrian door, a door locking mechanism must be installed while the gate is in motion.
- Do not install the product "upside down" or supported by elements do not support its weight. If necessary, add brackets at strategic points to ensure the safety of the automatism.
- Do not install the product in explosive site.
- Safety devices must protect the possible crushing, cutting, transport and danger areas of the motorized door or gate.
- Verify that the elements to be automated (gates, door, windows, blinds, etc.) are in perfect function, aligned and level. Also verify if the necessary mechanical stops are in the appropriate places.
- The control board must be installed on a safe place of any fluid (rain, moisture, etc.), dust and pests.
- You must route the various electrical cables through protective tubes, to protect them against mechanical exertions, essentially on

the power supply cable. Please note that all the cables must enter the control board from the bottom.

- If the automatism is to be installed at a height of more than 2,5m from the ground or other level of access, the minimum safety and health requirements for the use of work equipment workers at the work of Directive 2009/104/CE of European Parliament and of the Council of 16 September 2009.
- Attach the permanent label for the manual release as close as possible to the release mechanism.
- Disconnect means, such as a switch or circuit breaker on the electrical panel, must be provided on the product's fixed power supply leads in accordance with the installation rules.
- If the product to be installed requires power supply of 230Vac or 110Vac, ensure that connection is to an electrical panel with ground connection.
- The product is only powered by low voltage satefy with control board (only at 24V motors).
- Parts/products weighing more than 20 kg must be handled with special care due to the risk of injury. It is recommended to use suitable auxiliary systems for moving or lifting heavy objects.
- Pay special attention to the danger of falling objects or uncontrolled movement of doors/gates during the installation or operation of this product.

WARNINGS FOR USERS

- Keep this manual in a safe place to be consulted whenever necessary.
- If the product has contact with fluids without being prepared, it must immediately disconnect from the power supply to avoid short circuits, and consult a specialized technician.
- Ensure that technician has provided you the product manual and informed you how to handle the product in an emergency.
- If the system requires any repair or modification, unlock the automatism, turn off the power and do not use it until all safety conditions have been met.
- In the event of tripping of circuits breakers of fuse failure, locate the malfunction and solve it before resetting the circuit breaker or replacing the fuse. If the malfunction is not repairable by consult this manual, contact a technician.
- Keep the operation area of the motorized gate free while the gate in in motion, and do not create strength to the gate movement.
- Do not perform any operation on mechanical elements or hinges if the product is in motion.

RESPONSABILITY

- Supplier disclaims any liability if:
  - Product failure or deformation result from improper installation use or maintenance!
  - Safety norms are not followed in the installation, use and maintenance of the product.
  - Instructions in this manual are not followed.
  - Damaged is caused by unauthorized modifications
  - In these cases, the warranty is voided.

MOTORLINE ELECTROCELOS SA.
Travessa do Sobreiro, nº29
4755-474 Rio Côvo (Santa Eugénia)
Barcelos, Portugal

SYMBOLS LEGEND:

- Important safety notices

- Potentiometer information

- Useful information

- Connectors information

- Programming information

- Buttons information

02. MSMF-LOOP

GENERAL DESCRIPTION

The **MSMF-LOOP** is a magnetic sensor for vehicle detection with:
- Power supply solar panel + rechargeable or non-rechargeable battery;
- Communication via 868–869,8 MHz;
- Detection range up to 1 m;
- Integrated status LEDs;
- Very low power consumption operation.

The MSMF-LOOP sensor has been designed to work in conjunction with the **MRMF-REC** receiver, which is responsible for receiving the signals sent by the sensors, processing them, and activating the relay outputs according to the configured operating mode.

All system programming, channel management, and calibration are carried out through the receiver, which can connect up to eight MSMF-LOOP sensors completely wirelessly, ensuring reliable, secure, and synchronized communication.

- **Sensors must be programmed and calibrated after installation at the final location;**
- **Keep sensors away from magnetic materials and electrical connections during installation and operation (proximity to magnetic materials can interfere with readings);**
- **If a sensor is placed too close to a metal gate, the movement of the gate may cause interference with detection. It is recommended that the sensor be installed at least 1.5 metres from the gate.**
- **After calibration, the device emits a detection signal.**

This device should not be used as a safety device on its own, but should only complement other safety methods.

02. MSMF-LOOP

DIMENSIONS - MSMF LOOP

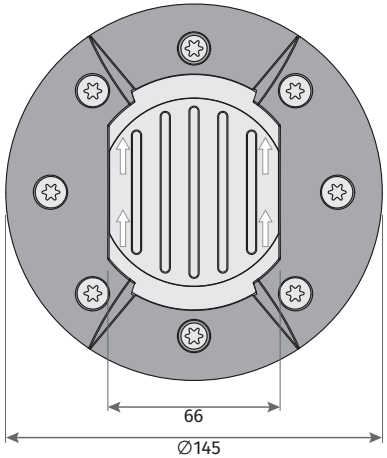

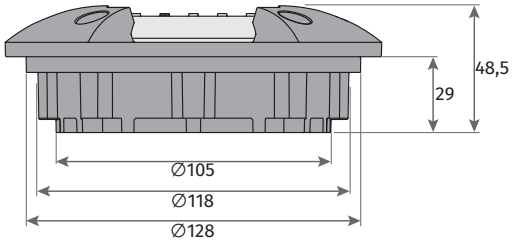

DIMENSIONS - LOOP-RMP

(Optional - Sold separately)

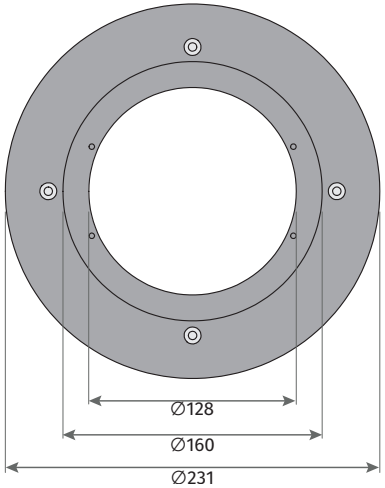

TECHNICAL CHARACTERISTICS

MSMF-LOOP	
• Sensor	Magnetometer
• Power supply	Power Supply: 3.35V Solar Panel + 3.2V 1800mAh Rechargeable Battery or 3.6V 7800mAh Non-Rechargeable Battery
• RF Frequency	868MHz ~ 869.8MHz
• Modulation	FSK
• RF Power (max.)	14dBm
• RF Sensitivity	-100dBm
• RF Range (open field)	50m
• Protection class	IP68
• Static Load Capacity	40 Tons
• Dimensions	Ø145x45mm
• Maximum speed for detecting presence	50km/h
• Maximum speed for detecting direction	20km/h
• Vehicle detection range	Up to 1m
CONSUMPTION	
• Non-rechargeable battery & self-test off	Up to 100uAh
• Non-rechargeable battery & self-test on	Up to 240uAh
• Solar panel + rechargeable battery & self-test off	Up to 90uAh
• Solar panel + rechargeable battery & self-test on	Up to 200uAh
• During signal transmission	Up to 50mA
• With the LEDs switched on	+ 100uAh
• While detecting a vehicle	Up to 20mA

02. MSMF-LOOP

TECHNICAL CHARACTERISTICS

RECHARGEABLE BATTERY	
• Chemistry	Li-Ion
• Dimensions	103450
• Nominal voltage	3.6V
• Maximum voltage	3.7V
• Capacity	2200mAh
• Operating temperature (Charging)	0°C to 45°C
• Operating temperature (Discharging)	-20°C to 60°C
• Storage temperature	-20°C to 50°C
• Charging in the sun	16% in 1h
• Charging in the shade	8% in 1h
NON-RECHARGEABLE BATTERY	
• Chemistry	Li-SOCl2
• Dimensions	14500 1S3P
• Nominal voltage	3.6V
• Capacity	7800mAh
• Operating Temperature	-60°C up to 85°C
• Storage Temperature	Up to 30°C

ESTIMATED BATTERY LIFETIME		
WITH SELF-TEST OFF	Rechargeable battery 1	2 years
	Non-rechargeable battery	9 years
WITH SELF-TEST ON	Rechargeable battery 1	10 months
	Non-rechargeable battery	3 years and 8 months

- Battery life may vary depending on the number of detections made;
- The lifespan of rechargeable batteries takes into account consumption that cannot be offset by the solar panel.

03. INSTALLATION

MSMF-LOOP INSTALLATION

IMPORTANT
- **Program and calibrate the sensors after final installation;**
- **Avoid proximity to magnetic materials and electrical cables/connections; they may cause reading interference.**
- **Metal gates: The opening and closing movement may cause interference if the sensor is too close; it is therefore recommended that the sensor be installed at least 1.5 metres from the gate.**

See page 7A for possible installation methods.

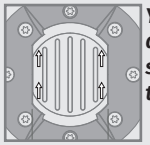

You should pay attention to the direction of the arrows on the sensor, taking into account the type of installation required.

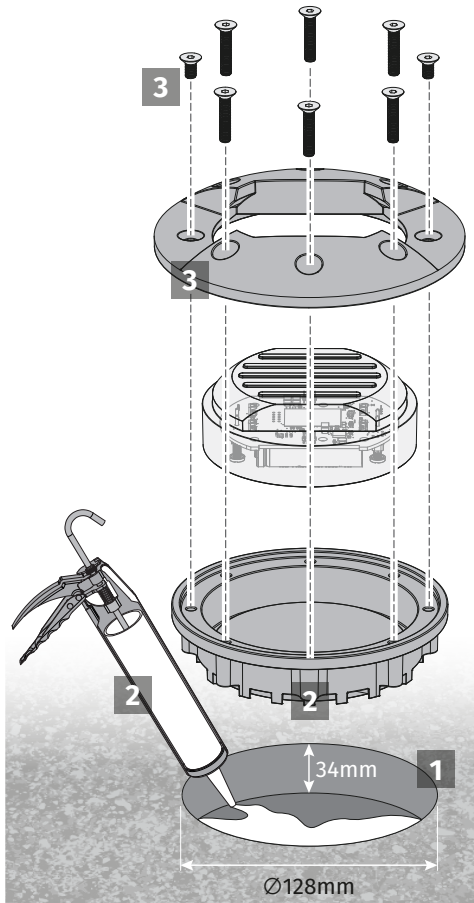

1 DRILL THE PAVEMENT
Dig a hole in the ground deep enough to embed the sensor.

2 APPLY ADHESIVE
Apply some type of adhesive to the hole, such as chemical anchor or cement, and place the sensor base into the hole while the adhesive is still fresh.

3 CLOSE THE DEVICE
Apply the MSMF-LOOP display and cover and secure with screws.

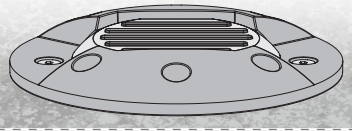

After the installation is complete, the LEDs light up, confirming a successful installation.

03. INSTALLATION

MSMF-LOOP-RMP INSTALLATION

(Optional - Sold separately)

IMPORTANT
- **Program and calibrate the sensors after final installation;**
- **Avoid proximity to magnetic materials and electrical cables/connections; they may cause reading interference.**
- **Metal gates: The opening and closing movement may cause interference if the sensor is too close; it is therefore recommended that the sensor be installed at least 1.5 metres from the gate.**

See page 7A for possible installation methods.

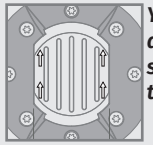

You should pay attention to the direction of the arrows on the sensor, taking into account the type of installation required.

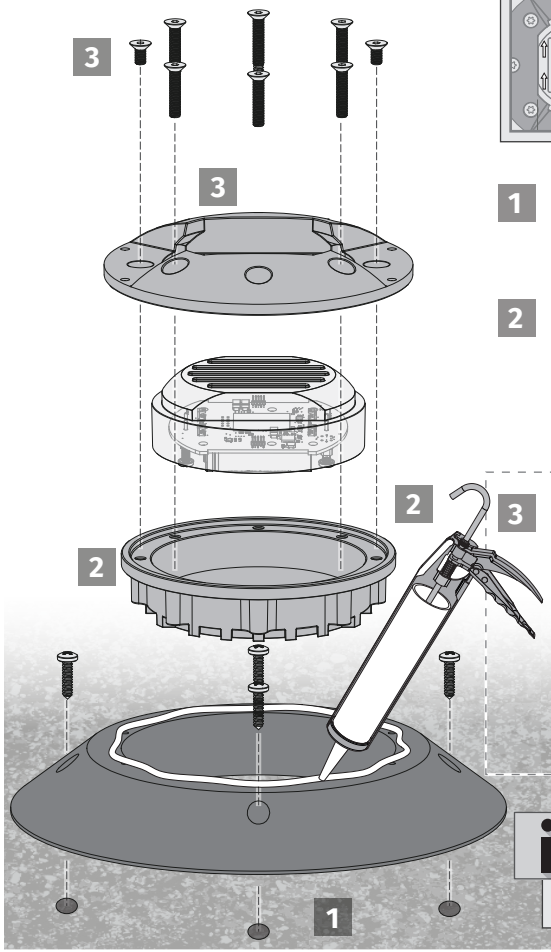

1 DRILL THE PAVEMENT
Drill four 5 mm diameter holes in the pavement and secure the ramp to the ground using screws.

2 APPLY ADHESIVE
Apply a suitable adhesive to the top of the ramp. While the adhesive is still wet, insert the sensor base into the hole

3 CLOSE THE DEVICE
Apply the MSMF-LOOP display and cover and secure with screws.

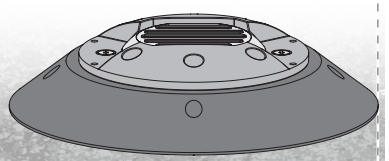

After the installation is complete, the LEDs light up, confirming a successful installation.

INSTALLATION MODES

The **MSMF-LOOP** can be installed in various ways to trigger the **MRMF-REC** relays under certain conditions. The **MRMF-REC** must be configured to the defined mode

It is not mandatory to install 8 MSMF-LOOPs.

FREE MODE	P8 → LL → 1L
Operation	Free user installation and configuration

In the other modes, the sensors must follow the channels shown in the diagram

ANTI-CRASH	P8 → LL → AC
Opens the barrier or gate when detecting a vehicle in group 1, keeping it open during the journey and giving the closing command when the vehicle leaves the range of group 2, ensuring that the barrier or gate does not close while the vehicle is halfway through the journey. If the journey is not completed, the closing command is executed after the set time.	
Operation	• Sensors 1 to 4 send a signal when they detect a vehicle, and the receiver activates the relay. • Sensors 5 to 8 send a signal after detecting and then stop detecting a vehicle, and the receiver deactivates the relay. • Sensors must be installed with the arrows pointing in the direction of vehicle movement; • The sensors must be installed in the position shown in the diagram.
MSMF-LOOP settings	**Channel 1 to 4** • Presence/direction detection mode (d8 → 02); • Same direction selected. **Channel 5 to 8** • Presence/direction detection mode (d8 → 02); • Same direction selected; • Signal inversion ON (8n → 01)
MRMF-REC settings	Relays in bistable mode (rE → rL); Relay reset in case of error must be enabled (rE → 01 até 99); All MSMF-LOOPs must be configured on the same relay (rd).

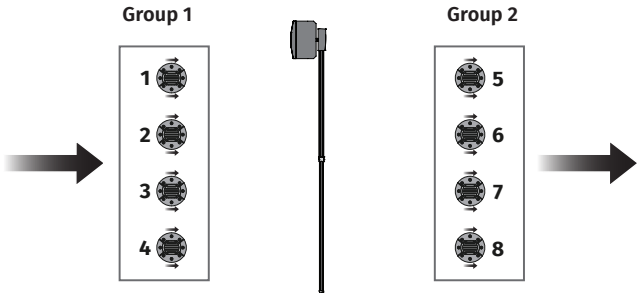

- The use of 8 **MSMF-LOOPs** is not mandatory; at least one per group is required.

INSTALLATION MODES

LOGIC AND	P8 → LL → An
Opens the barrier or gate when a vehicle is detected by group 1 and then by group 2, ensuring that the barrier or gate only opens when the vehicle passes through the correct path. Can be used to detect vehicle direction more accurately	
Operation	• Sensors 1 to 8 send a signal when they detect a vehicle; • The receiver only activates the relay when it receives a signal from at least one sensor in group 1 and at least one sensor in group 2; • The sensors must be installed in the position shown in the diagram.
MSMF-LOOP settings	**Channels 1 to 8** • Presence or direction detection mode (d8); • Same direction selected; • Signal inversion OFF (8n → 00)
MRMF-REC settings	Relays in monostable mode or photocell (rE → rP/rH) All MSMF-LOOPs must be configured on the same relay (rd)

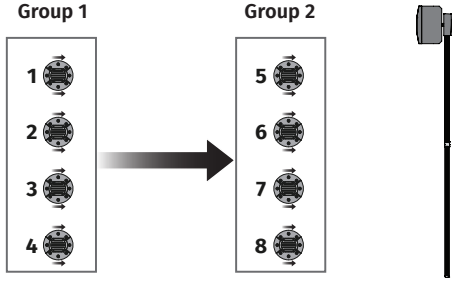

- It is not mandatory to use 8 MSMF-LOOPs, but at least one per group is required.
- The distance between groups depends on the area and the desired application.
- The distance between sensors in the same group depends on the width of the lane or the desired application.

INSTALLATION MODES

LOGIC AND ANTI-CRASH	P8 → LL → AA
Combine the AND logic with Anti-Crash, giving the opening command only when a vehicle is detected by group 1.1 and then by group 1.2, keeping the barrier or gate open during the journey. The closing command is given when the vehicle passes through groups 2.1 and 2.2 and leaves the range of group 2.2.	
Operation	• Sensors 1 to 4 send a signal when they detect a vehicle; • The receiver activates the relay when it receives a signal from group 1.1 and group 1.2; • Sensors 5 to 8 send a signal after detecting and no longer detecting a vehicle; • The receiver deactivates the relay after receiving a signal from group 2.1 and group 2.2; • The sensors must be installed in the position shown in the diagram; • When the required detection mode is directional, you must install the sensors in the direction of the vehicles' movement (see the direction of the arrows on the sensor).
MSMF-LOOP settings	**Channel 1 to 4** • Presence or direction detection mode (d8); • Same direction selected.. **Channel 5 to 8** • Presence or direction detection mode (d8); • Same direction selected; • Signal inversion ON (Ia → 01)
MRMF-REC settings	• Relays in bistable mode (rE → rL) • Relay reset in case of error must be active (rt → 01 to 99) • All MSMF-LOOPs must be configured on the same relay (rd)

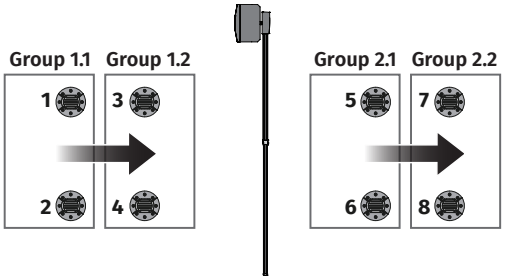

- It is not mandatory to use 8 MSMF-LOOPs, but at least one per group is required.
- The distance between groups depends on the area and the desired application.
- The distance between sensors in the same group depends on the width of the lane or the desired application.

INSTALLATION MODES

ANTI-CRASH BIDIRECIONAL	P8 → LL → A2
Similar to Anti-Crash mode, it ensures that the barrier or gate does not close while a vehicle is passing through, and can be used on roads where vehicles enter and exit through the same barrier or gate. Groups 1.1 and 2.1 act in one direction and groups 1.2 and 2.2 act in the opposite direction.	
Operation	• Group 1.1 sends a signal when it detects a vehicle; • The receiver activates the relay; • Group 2.1 sends a signal after detecting and then stopping the detection of a vehicle; • The receiver deactivates the relay; • Group 2.2 sends a signal when it detects a vehicle; • The receiver activates the relay; • Group 1.2 sends a signal after detecting and then stopping the detection of a vehicle; • The receiver deactivates the relay; • The sensors must be installed in the position shown in the diagram. • When the signal for the sequence 'Group 1.1 + Group 2.1' is activated, it automatically deactivates the signal for 'Group 2.2 + Group 1.2'. • When the signal for the sequence 'Group 2.2 + Group 1.2' is activated, it automatically deactivates the signal for 'Group 1.1 + Group 2.1'. • When the desired detection mode is directional, you must install the sensors in the direction of vehicle movement (see the direction of the arrows on the sensor).
MSMF-LOOP settings	**Channels 1 and 2** • Presence or direction detection mode (d8); • The direction must be the same as in channels 5 and 6, opposite to channels 3, 4, 7 and 8; • Signal inversion OFF (Ia → 00) **Channels 3 and 4** • Presence or direction detection mode (d8); • The direction must be the same as in channels 7 and 8, opposite to channels 1, 2, 5 and 6; • Signal inversion ON (Ia → 01) **Channels 5 and 6** • Presence or direction detection mode (d8); • The direction must be the same as on channels 1 and 2, opposite to channels 3, 4, 7 and 8; • Signal inversion ON (Ia → 01) **Channels 7 and 8** • Presence or direction detection mode (d8); • The direction must be the same as on channels 3 and 4, opposite to channels 1, 2, 5 and 6; • Signal inversion OFF (Ia → 00)
MRMF-REC settings	• Relays in bistable mode (rE → rL) • All MSMF-LOOPs must be configured on the same relay (rd)

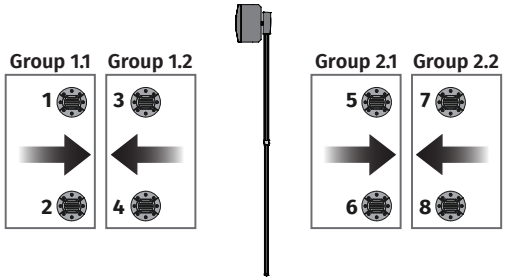

- It is not mandatory to use 8 MSMF-LOOPs, but at least one per group is required.

03. INSTALLATION

INSTALLATION MODES

CONTROL OF 2 BARRIERS (FREE MODE)	P → LL → Fr
Allows control of two barriers with a single MRMF-REC, which can operate as desired by configuring the sensors correctly.	
Operation	It can operate in any of the modes described above, by simply configuring the sensors and relays.
MSMF-LOOP settings	Sensors can be placed on one side or both sides of the barrier to operate in one of the modes described above.
MRMF-REC settings	Relay mode according to any previous logic.
Barrier Settings	**Entrance Barrier** • Presence/direction detection mode (d. I); • Output on Relay 1 (r.d → r. I) **Exit Barrier** • Presence/direction detection mode (E. I); • Output on Relay 2 (r.d → r.2)

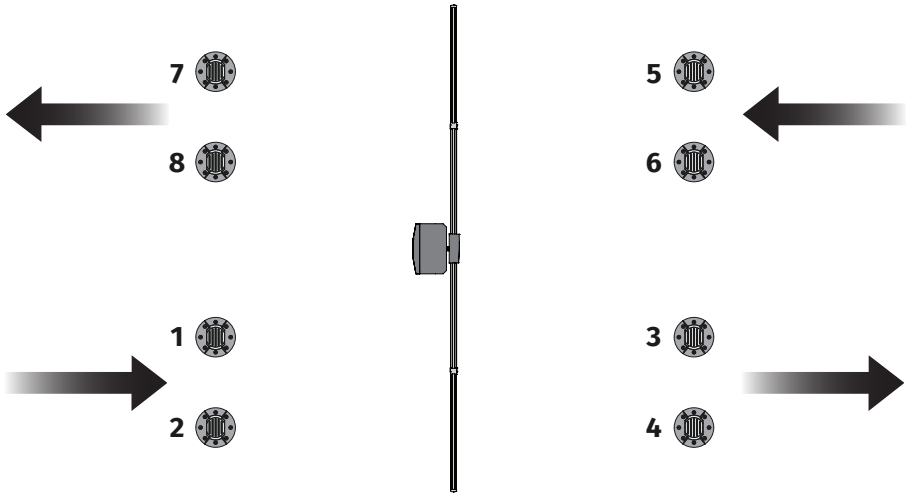

- It is not mandatory to use 8 MSMF-LOOPs, but at least one per group is required.
- The distance between groups depends on the area and the desired application.
- The distance between sensors in the same group depends on the width of the lane or the desired application.

The sensors can be installed in any position the user wishes, there is no need to follow the diagram.

04. PROGRAMMING

ACTIVATE PROGRAMMING MODE

In order to save energy, the sensor does not receive commands from the **MRMF-REC** constantly. To do this, it is necessary to enter programming mode.

When pairing an MSMF-LOOP to an MRMF-REC, programming mode remains active until it receives the close command from the MRMF-REC.

If the **MSMF-LOOP** is already paired:

- Bring a metal object close for 30 seconds, LEDs will start flashing once every 3 seconds
- Move the metal object away, LEDs will flash twice every 3 seconds
- On the **MRMF-REC**, in the ***MENU L***, open the channel where the device is stored to enter programming mode. The LEDs will flash faster.

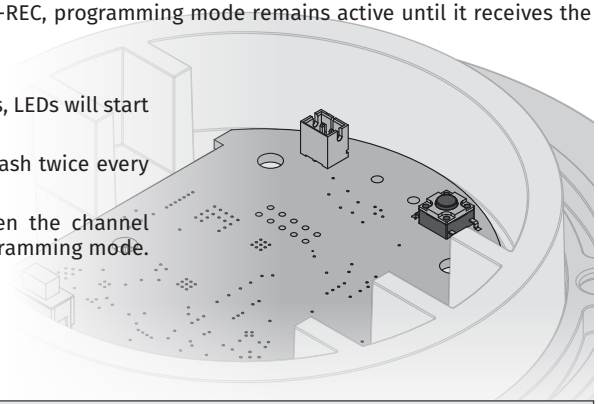

Programming is active and will turn off when it receives a command from the **MRMF-REC *(Menu CP)*** or after 1 minute without receiving any settings.

ATTENTION: If the MRMF-REC has a firmware version equal to or higher than rev003, it is not required to activate programming mode.

04. PROGRAMMING

SELECT FREQUENCY

To select the communication frequency, follow these steps:

1. On the **MSMF-LOOP** board, press the **[PROG]** button for 2 seconds;
2. The LEDs on **MSMF-LOOP** will flash every 5 seconds indicating the selected frequency **(see table)**.
3. Click the **[PROG]** button to advance to the next frequency until you reach the desired one.
   After reaching the last frequency, the next click jumps back to the first frequency.
4. To exit, on the **MSMF-LOOP** board, press the **[PROG]** button again until the LEDs flash once, then release the button. Afterwards, the MSMF-LOOP LEDs will turn on for 1.5 seconds.

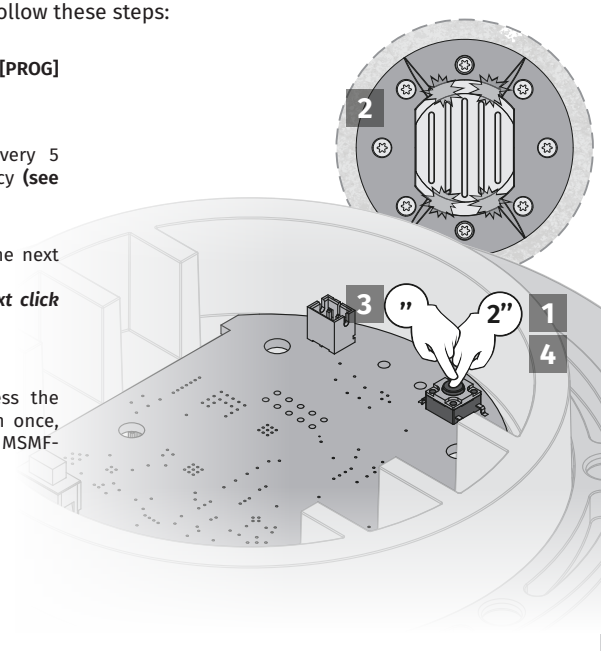

Number of times the LEDs flash	Selected frequency
1	868.00 MHz
2	868.60 MHz
3	869.20 MHz
4	869.80 MHz

04. PROGRAMMING

PAIRING (JOIN MODE)

To connect a sensor **MSMF-LOOP** with the receiver **MRMF-REC**, follow these steps:

1. On the **MRMF-REC** receiver, access ***MENU L*** and select the channel (from ***01*** to ***08***) where you will store the sensor and select ***MENU PR***.
2. On the **MSMF-LOOP**, press the ***PROG*** button (***x2***) to enter ***JOIN*** mode. The LEDs will turn on to indicate that it is ready to be paired.
3. If the MSMF-LOOP and MRMF-REC are successfully connected, the MSMF-LOOP LEDs will flash and the MRMF-REC buzzer will sound three times.
4. If the connection fails after 10 seconds, the MSMF-LOOP LEDs will turn off and the MRMF-REC buzzer will sound four times.

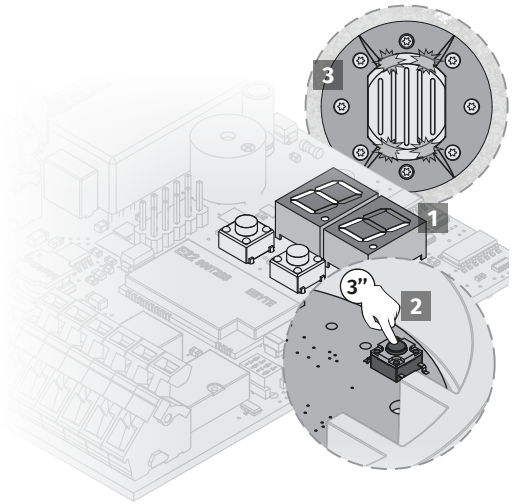

Pairing	LED behaviour
Yes	Flashes 2 times and turn off
No	Continuously on and turn off after 10 seconds

DEVICE RESET

To reset an **MSMF-LOOP** to factory settings, press the **PROG** button until the LEDs flash rapidly four times, indicating that the reset is complete.

CAUTION: It is necessary to remove the MSMF-LOOP from the MRMF-REC to which it was connected.