HUAWEI eKit



1

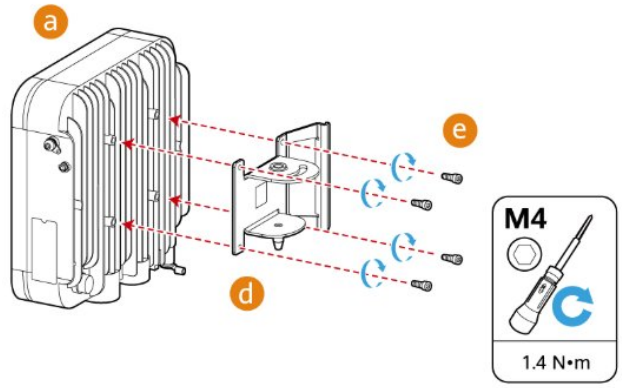

2

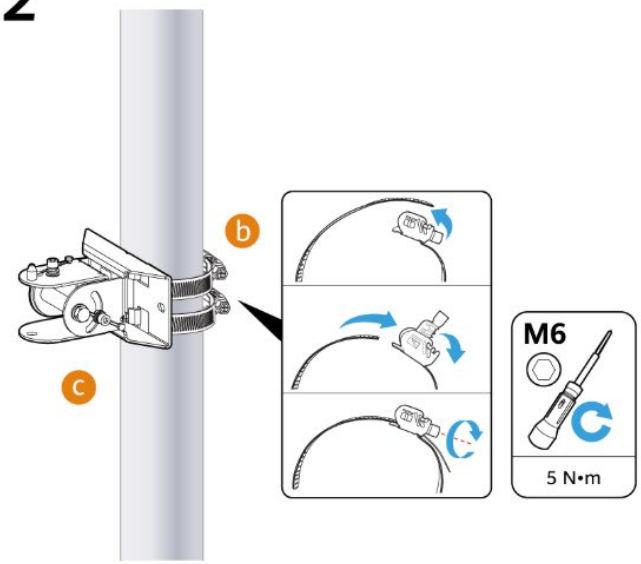

3

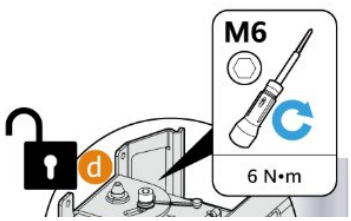

HUAWEI eKit



1

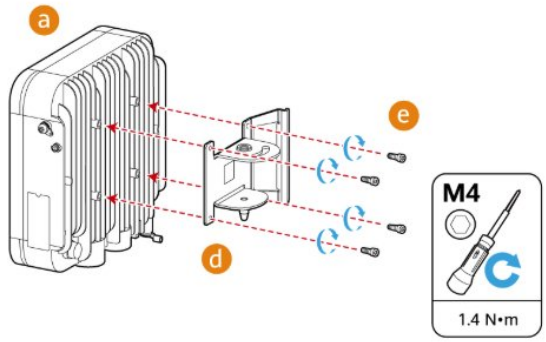

2

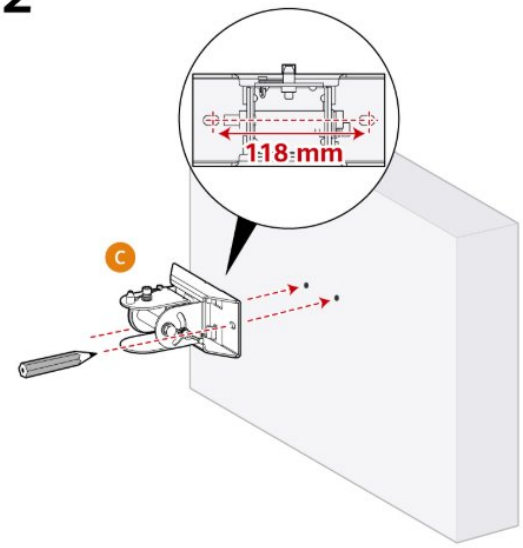

3

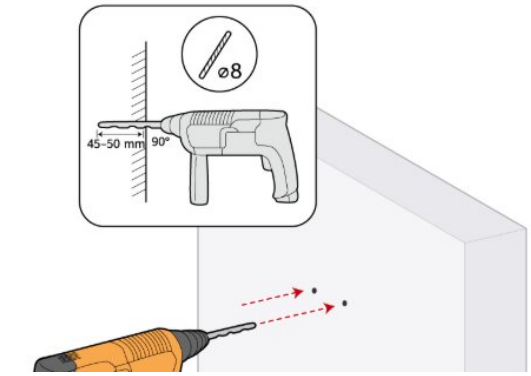

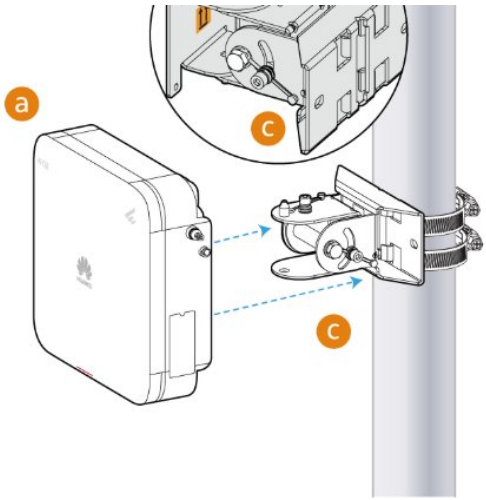

4

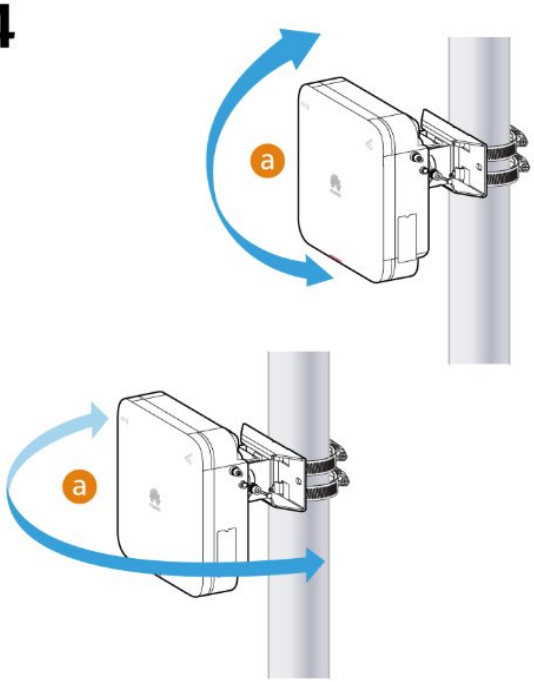

5

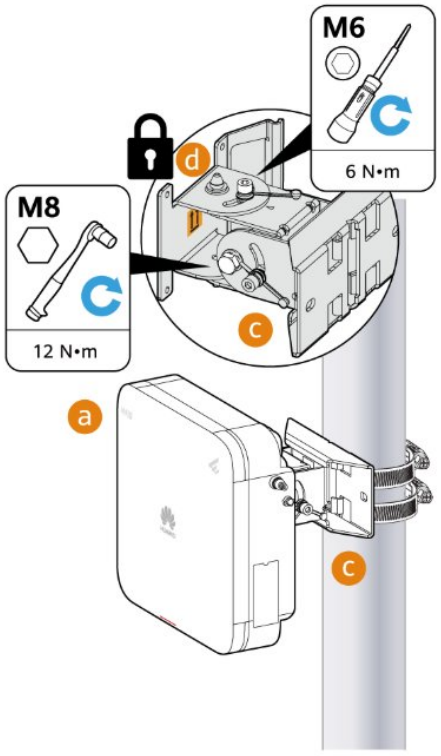



4

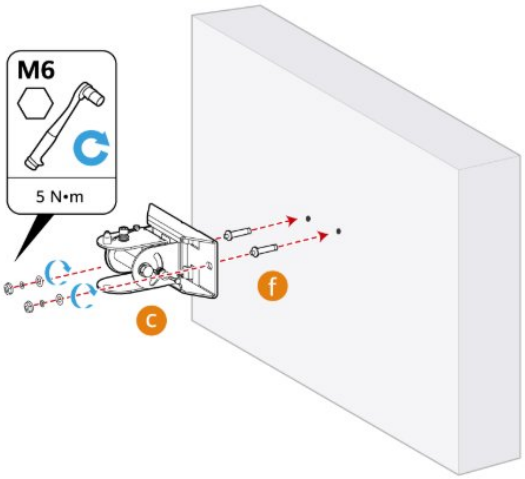

5

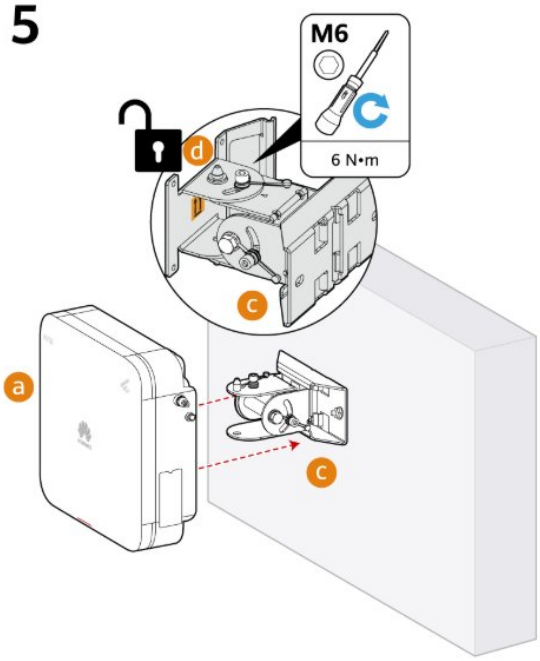

6

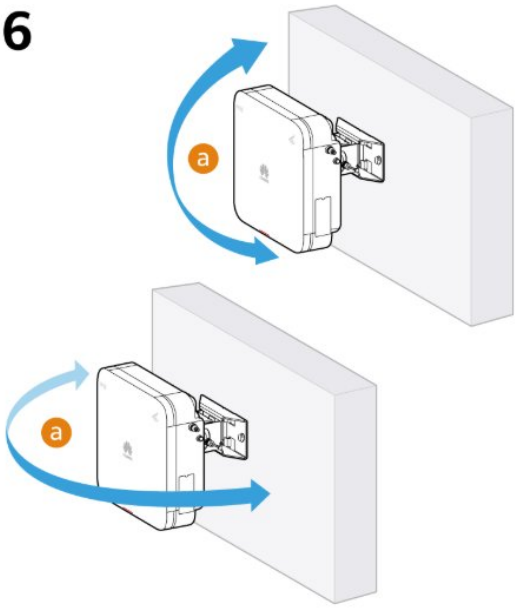

6

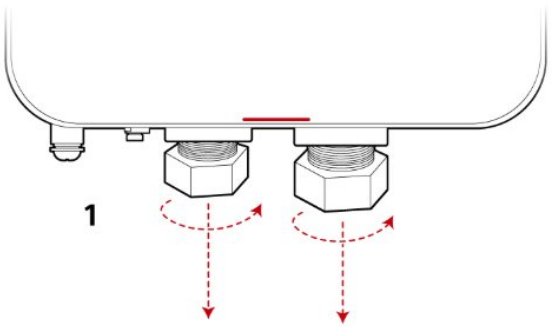

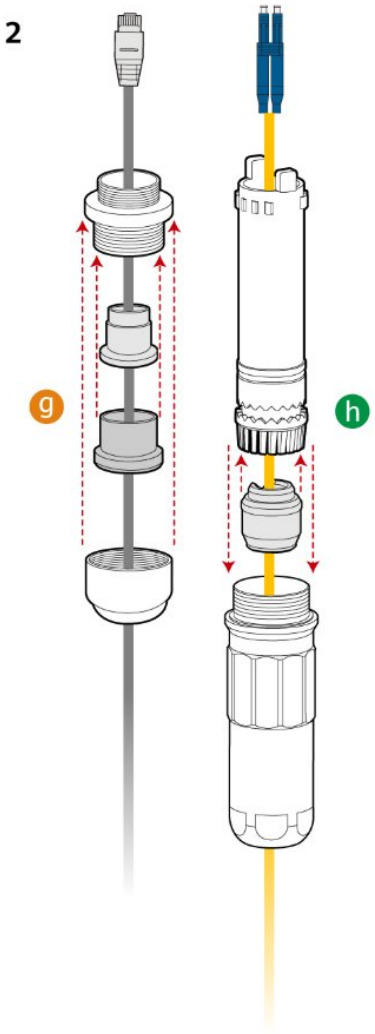

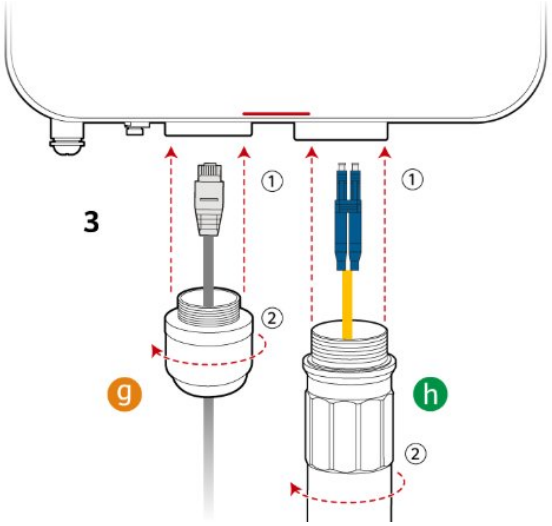

7

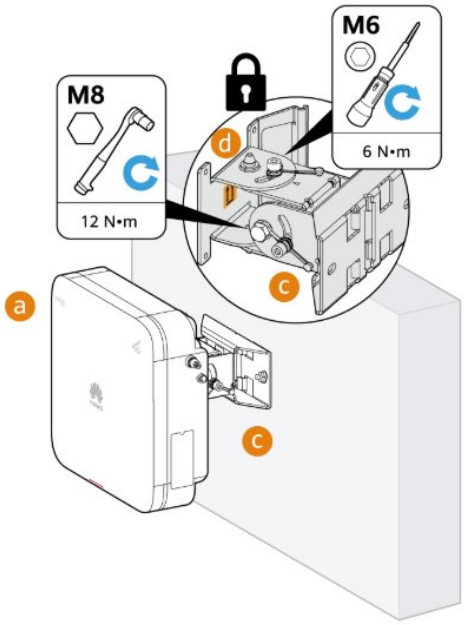

8

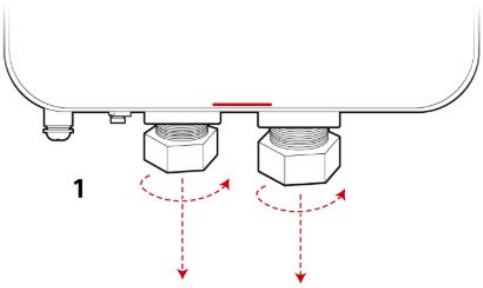

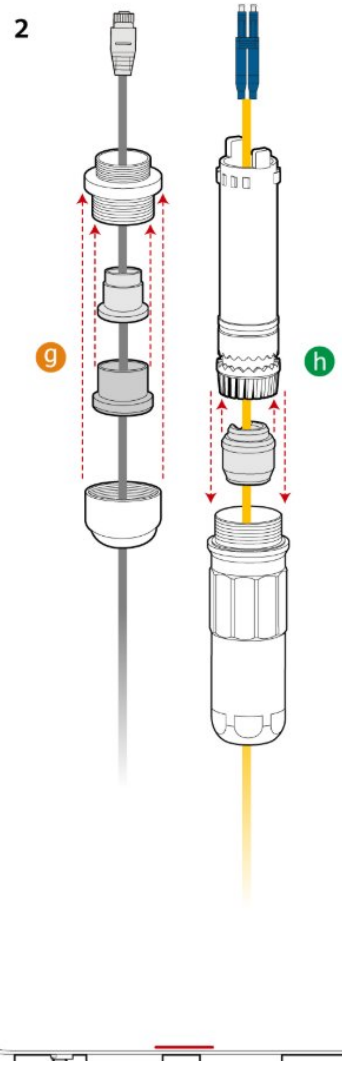



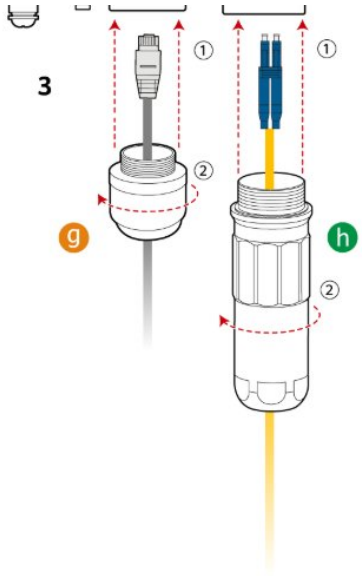
3
①
①
②
g
h
②

7

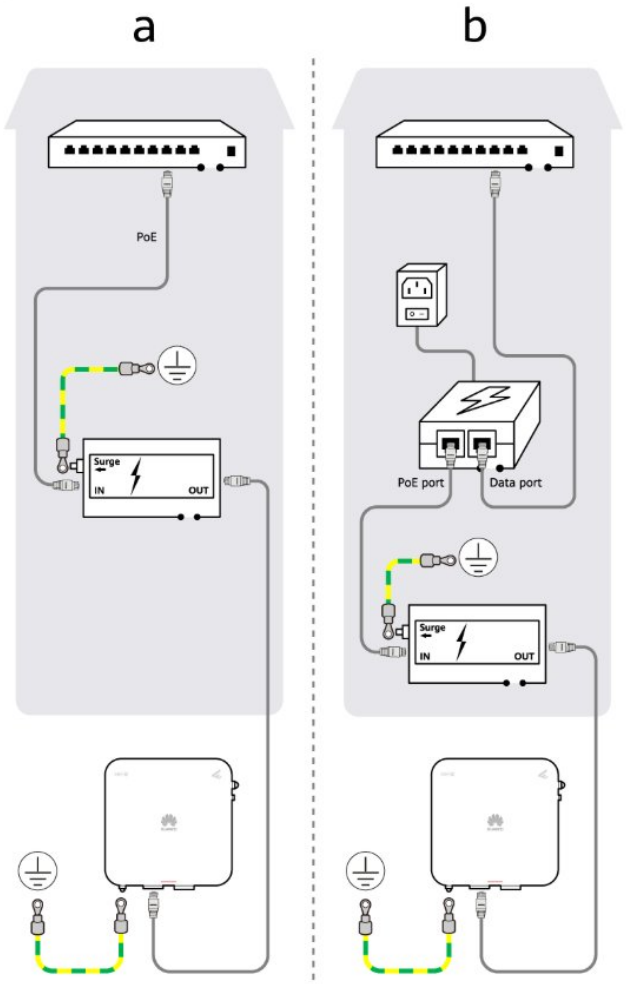
a
b
PoE
Surge
IN
OUT
PoE port
Data port
Surge
IN
OUT

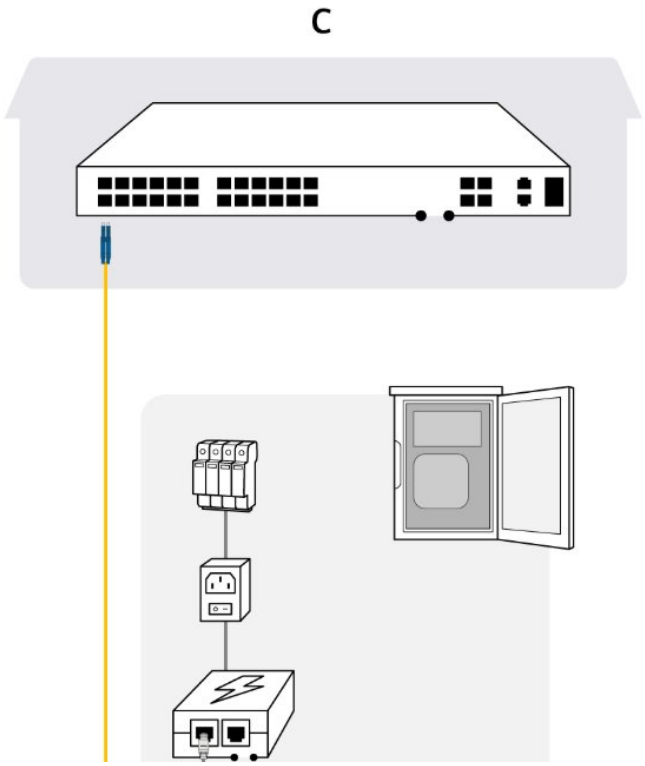
c

9

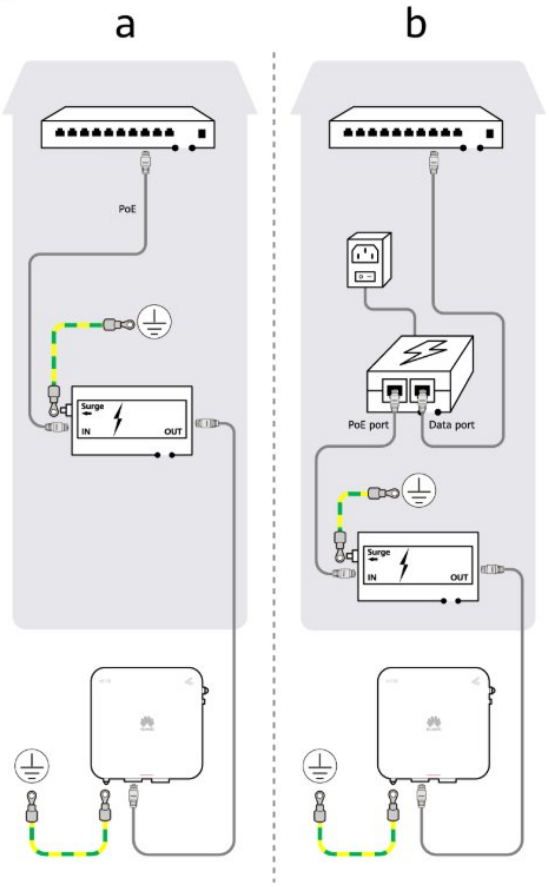
a
b
PoE
Surge
IN
OUT
PoE port
Data port
Surge
IN
OUT

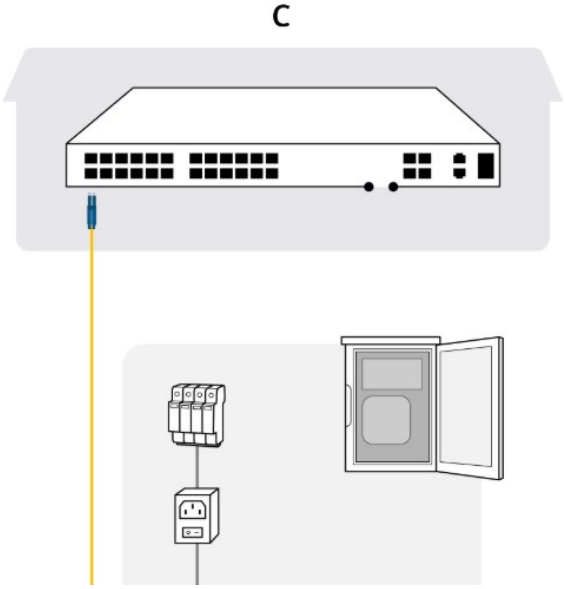
c

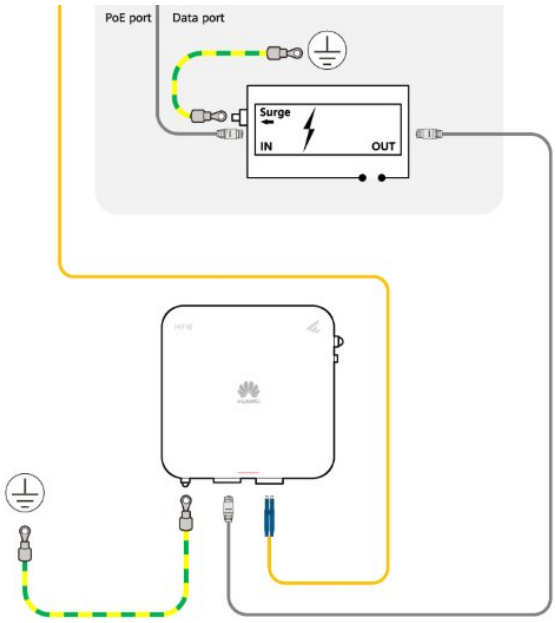
PoE port
Data port
Surge
IN
OUT

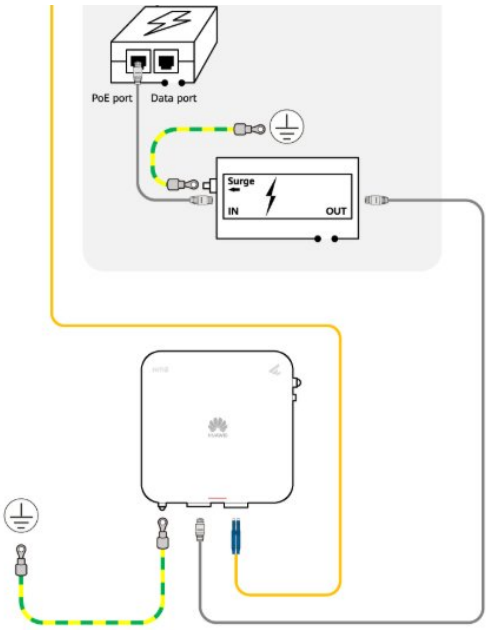
PoE port
Data port
Surge
IN
OUT