HUAWEI eKit

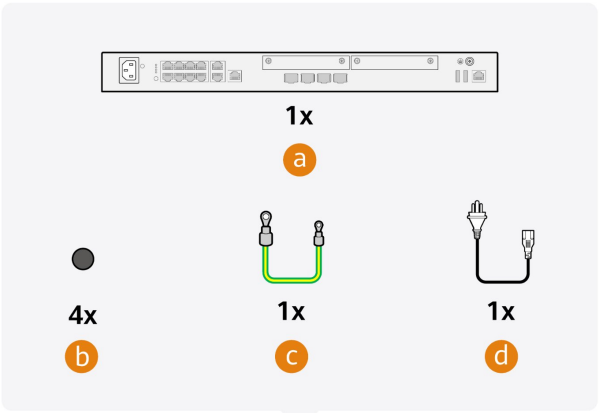

1

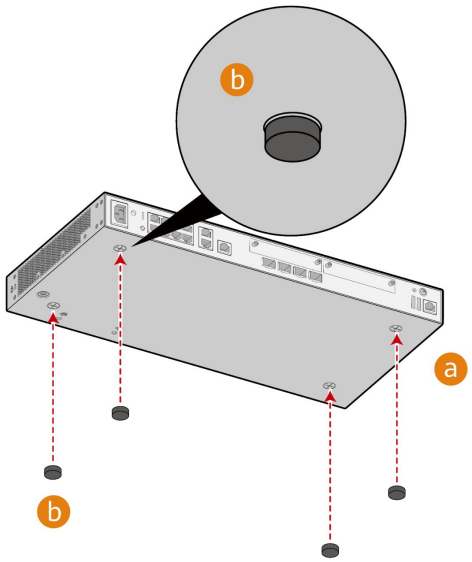

2

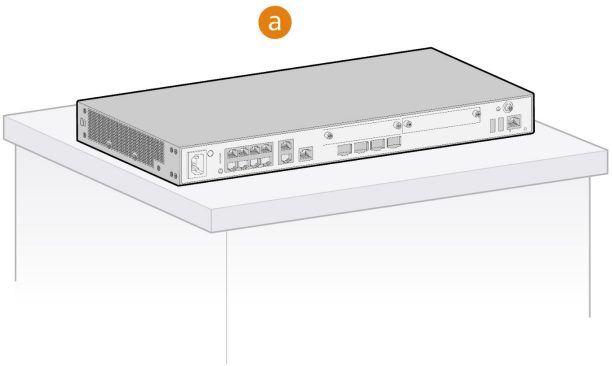

HUAWEI eKit

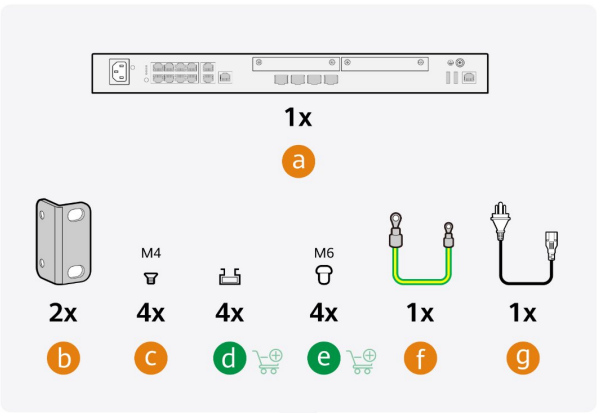

1

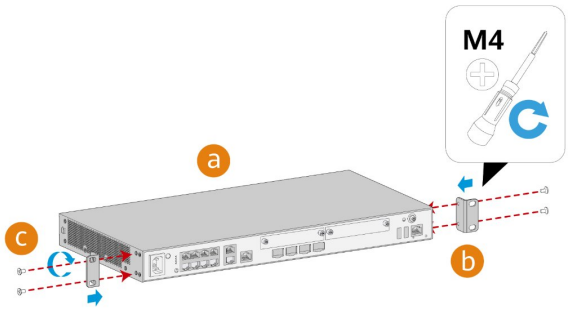

2

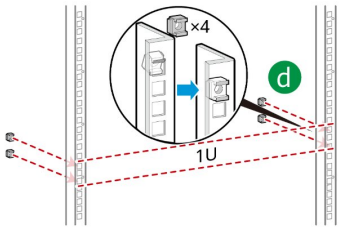

3

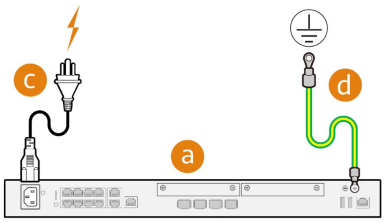
c
d
a

4

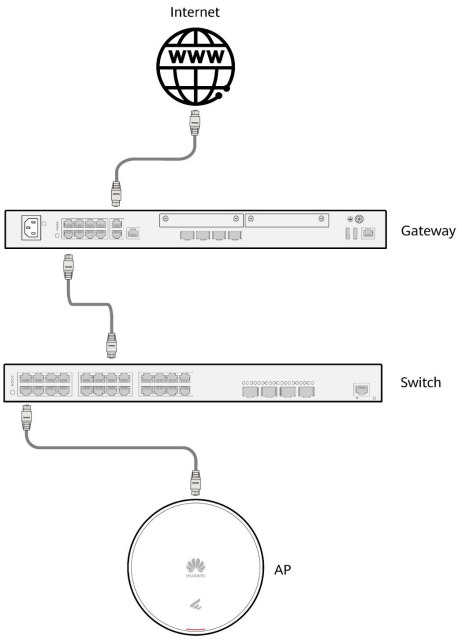
Internet
WWW
Gateway
Switch
AP

5

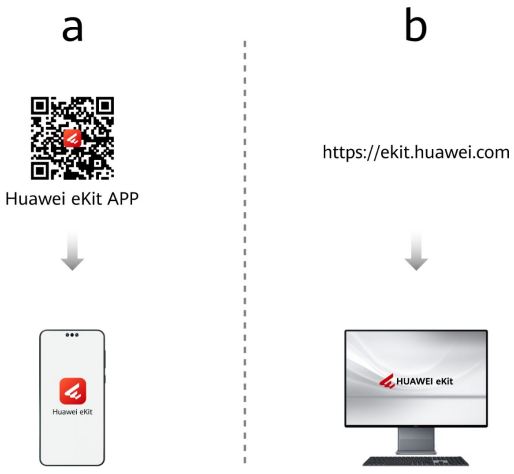
a
b
Huawei eKit APP
https://ekit.huawei.com
Huawei eKit
HUAWEI eKit

3

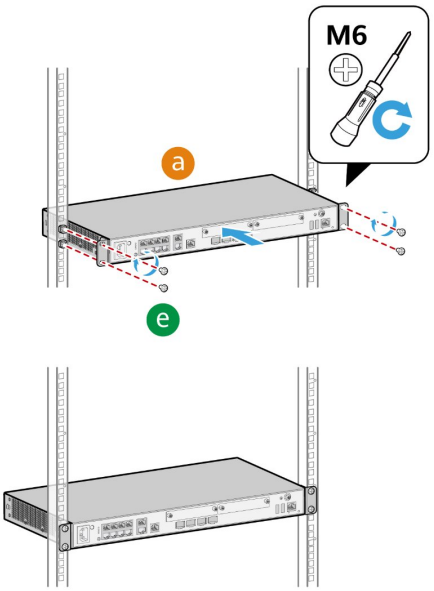
M6
a
e

4

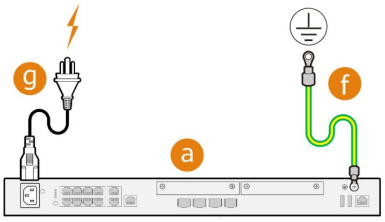
g
f
a

5

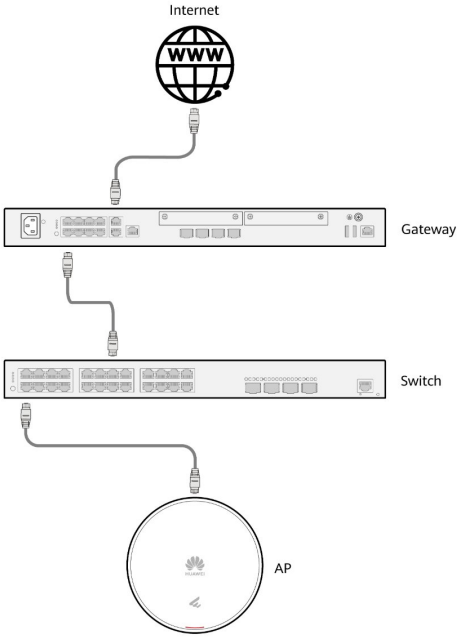
Internet
WWW
Gateway
Switch
AP

6

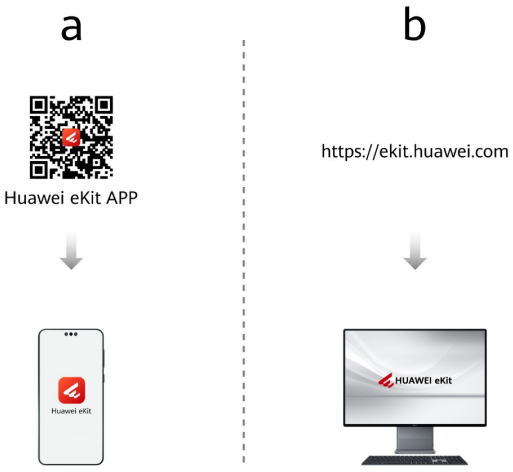
a
b
Huawei eKit APP
https://ekit.huawei.com
Huawei eKit
HUAWEI eKit