SUN2000-(3KTL-10KTL)-M1

Quick Guide

Issue: 10
Part Number: 31500FKA
Date: 2026-03-30

HUAWEI TECHNOLOGIES CO., LTD.

HUAWEI

NOTICE

1. The information in this document is subject to change due to version upgrades or other reasons. Every effort has been made in the preparation of this document to ensure accuracy of the contents, but all statements, information, and recommendations in this document do not constitute a warranty of any kind, express or implied. You can download this document by scanning the QR code.
2. Before installing the device, read the user manual carefully to get familiar with product information and safety precautions.
3. Only qualified and trained electrical technicians are allowed to operate the device. Operation personnel should understand the composition and working principles of the grid-tied PV power system and local regulations.
4. Before installing the device, check that the package contents are intact and complete against the packing list. If any damage is found or any component is missing, contact your dealer.
5. Use insulating tools when installing the device. For personal safety, wear proper personal protective equipment (PPE).
6. Huawei shall not be liable for any consequences caused by the violation of the storage, transportation, installation, and operation regulations specified in this document and the user manual.

1 Product Description

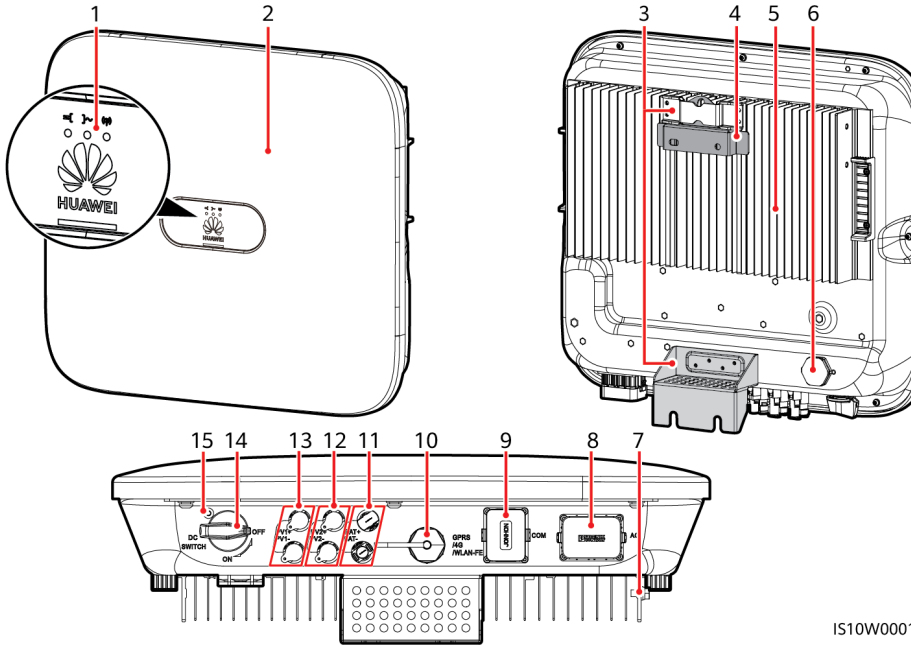

IS10W00016

(1) LED
(2) Front panel
(3) Hanging kit
(4) Mounting bracket
(5) Heat sink
(6) Ventilation valve
(7) Ground screw
(8) AC output port (AC)
(9) Communication port (COM)
(10) Smart Dongle port (GPRS/4G/WLAN-FE)
(11) Battery terminals (BAT+/BAT–)
(12) DC input terminals (PV2+/PV2–)
(13) DC input terminals (PV1+/PV1–)
(14) DC switch (DC SWITCH)
(15) Screw hole for the DC switch

Copyright © Huawei Technologies Co., Ltd. 2026. All rights reserved.

2 Installing the Equipment

2.1 Installation Requirements

Angle

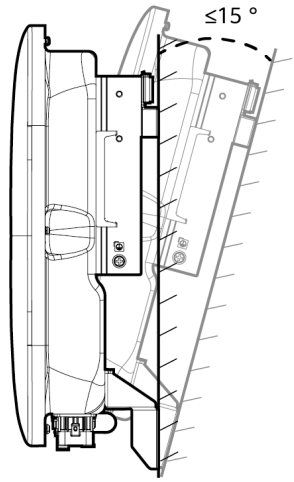

Space

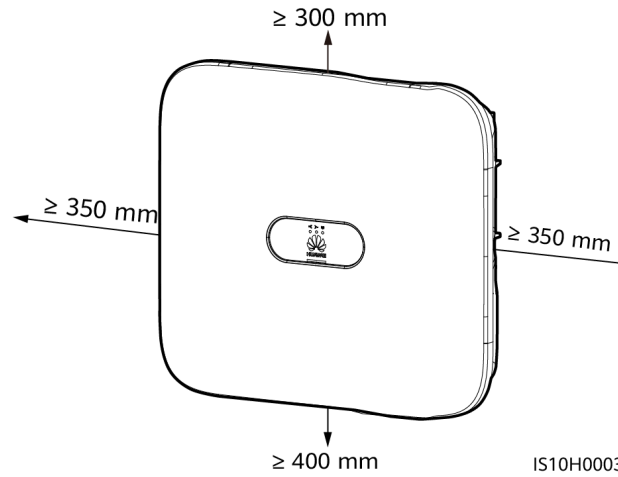

Dimensions

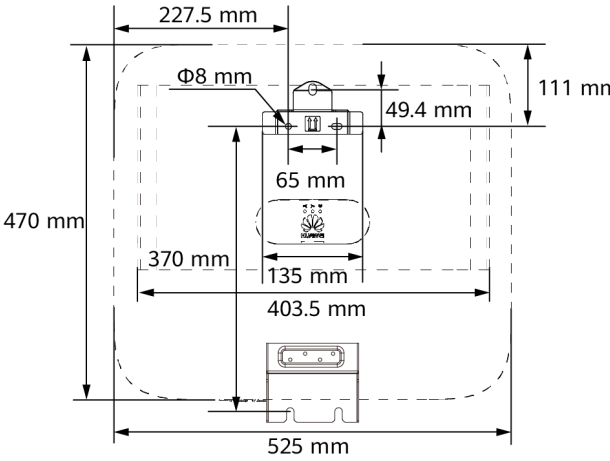

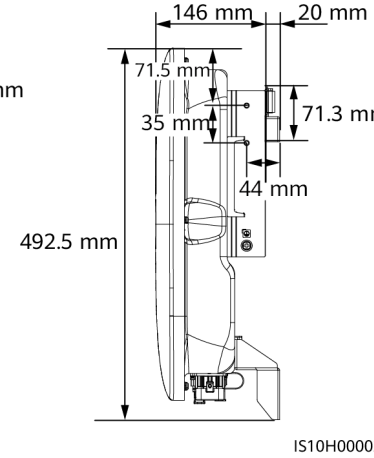

NOTE

Two M6 screw holes are reserved on both left and right sides of the inverter for installing an awning.

2.2 Installing the Inverter

DANGER

When drilling holes, avoid the water pipes and power cables buried in the wall.

1. Install the mounting bracket.

NOTE

- M6x60 expansion bolts are delivered with the inverter. If the length and number of the bolts do not meet installation requirements, prepare M6 stainless steel expansion bolts by yourself.
- The expansion bolts delivered with the inverter are used for solid concrete walls. For other types of walls, prepare bolts by yourself and ensure that the wall meets the load bearing requirements of the inverter.
- Loosen the nuts, flat washers, and spring washers of the two expansion bolts.

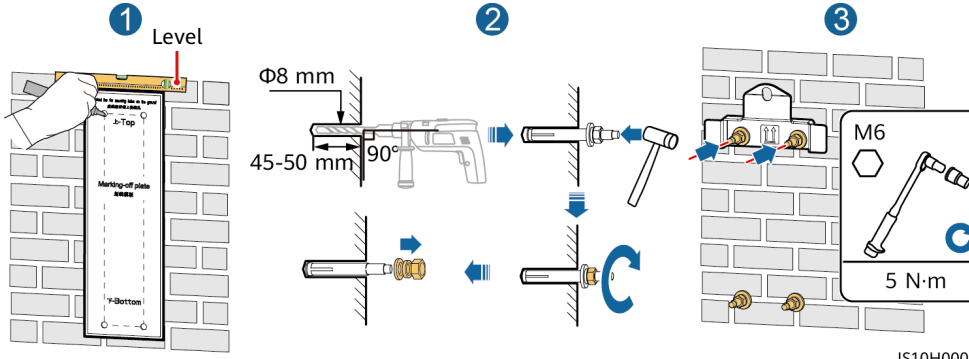

IS10H00003

2. (Optional) Install the screw for locking the DC switch.

NOTE

- The screws for DC switches are delivered with solar inverters. According to Australian standards, the screws are used to secure DC switches (DC SWITCH) to prevent them from being turned on by mistake.
- For the model used in Australia, perform this step to meet the local standards.

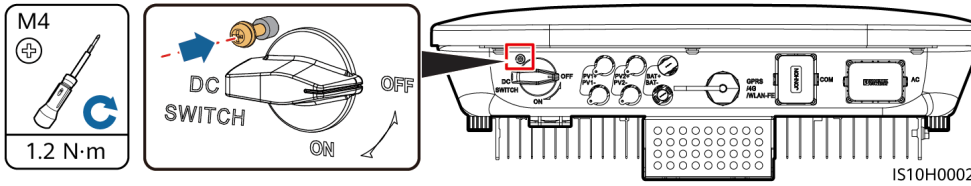

IS10H00025

3. Install the inverter on the mounting bracket.

4. (Optional) Install an anti-theft lock.

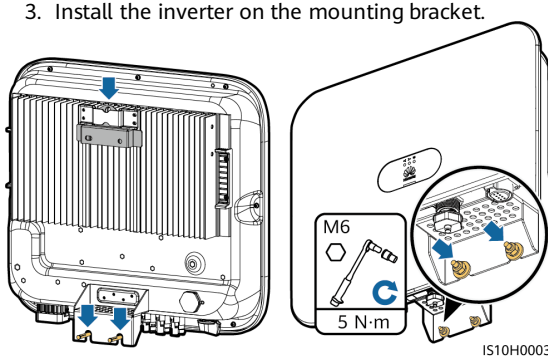

IS10H00033

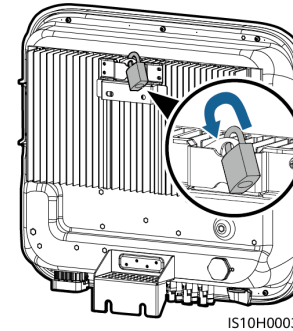

IS10H00034

NOTE

Prepare an anti-theft lock suitable for the lock hole diameter (Φ8 mm) and ensure that the lock can be installed successfully. An outdoor waterproof lock is recommended.

3 Electrical Connections

3.1 Preparing for Installation

WARNING

- Do not connect loads between the inverter and the AC switch that directly connects to the inverter. Otherwise, the switch may trip by mistake.
- If an AC switch is used with specifications beyond local standards, regulations, or Huawei's recommendations, the switch may fail to turn off in a timely manner in case of exceptions, causing serious faults.

CAUTION

Each inverter must be equipped with an AC output switch. Multiple inverters cannot connect to the same AC output switch.

NOTICE

- To ensure that the inverter can be safely disconnected from the power grid when an exception occurs, connect an AC switch to the AC side of the inverter. Select an appropriate AC switch in accordance with local industry standards and regulations.
- Cable specifications must meet the requirements in local standards. Electrical connections must meet the requirements in the relevant regulations of the country or region.
- Before connecting cables, ensure that the DC SWITCH on the inverter and all the switches connected to the inverter are set to OFF. Otherwise, the high voltage of the inverter may result in electric shocks.

No.	Item	Type	Specifications
1	PE cable	Single-core outdoor copper cable	Conductor cross-sectional area ≥ 4 mm^2
2	AC output power cable	Outdoor copper cable	• Conductor cross-sectional area: 4–6 mm^2 • Cable outer diameter: 10–21 mm
3	DC input power cable and (optional) battery cable	Standard outdoor PV cable in the industry (recommended model: PV1-F)	• Conductor cross-sectional area: 4–6 mm^2 • Cable outer diameter: 5.5–9 mm
4	(Optional) RS485 communications cable (used to cascade inverters or connect to the RS485 signal port on the SmartLogger)	Two-core outdoor shielded twisted pair cable	• Conductor cross-sectional area: 0.2–1 mm^2 • Cable outer diameter: 4–11 mm Note: When devices such as the Smart Power Sensor and the energy storage device are both connected to the inverter, use 0.2–0.5 mm^2 cables.
5	(Optional) RS485 communications cable (used to connect to the RS485 signal port on devices such as the Smart Power Sensor and the energy storage device)		
6	(Optional) Rapid shutdown switch signal cable		
7	(Optional) Backup Box signal cable		
8	(Optional) Grid scheduling signal cable	Five-core outdoor cable	

No.	Item	Type	Specifications
9	AC switch	Recommended: three-phase AC circuit breaker	Rated voltage ≥ 380 V AC Rated current: • 16 A (3KTL–6KTL) • 25 A (8KTL–10KTL)

3.2 Installing the PE Cable

DANGER

Do not connect the neutral wire to the enclosure as a PE cable. Otherwise, electric shocks may occur.

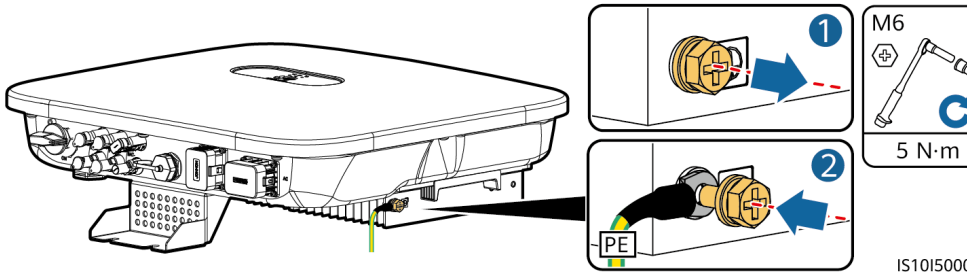

IS10I50003

NOTE

- The PE point at the AC output port is used only as a PE equipotential point, and cannot substitute for the PE point on the enclosure.
- It is recommended that silica gel or paint be used around the ground terminal after the PE cable is connected.

3.3 Installing the AC Output Power Cable

NOTICE

Ensure that the protection layer of the AC output power cable is inside the connector, the core wires are totally inserted into the cable hole, and the cable is connected securely. Failing to do so may cause device malfunction or damage.

NOTE

Strip the insulation layers of the AC output power cable by the recommended length (12–16 mm) to ensure that the cable conductors are completely inside the conductor insertion points and no insulation layer is pressed into the conductor insertion points. Otherwise, the device may fail to run properly or be damaged during operation.

1. Connect the AC output power cable to the AC connector.

Stripping Requirements

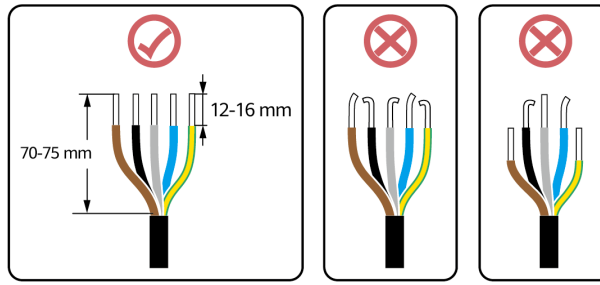

IS06I20048

Five-Core Cable (L1, L2, L3, N, and PE)

NOTE

- This section describes how to connect a five-core AC output power cable to an AC connector.
- A three-core AC output power cable can be connected similarly. The three-core cable (L1, L2, and L3) is not connected to the neutral wire or PE wire.
- A four-core or five-core AC output power cable can be connected similarly. The four-core cable (L1, L2, L3, and PE) is not connected to the N wire, and the four-core cable (L1, L2, L3, and N) is not connected to the PE wire.

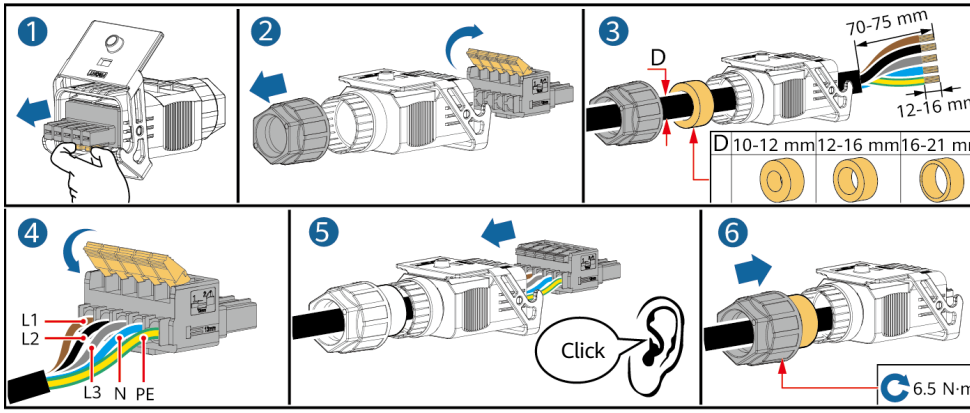

IS10I20001

2. Connect the AC connector to the AC output port.

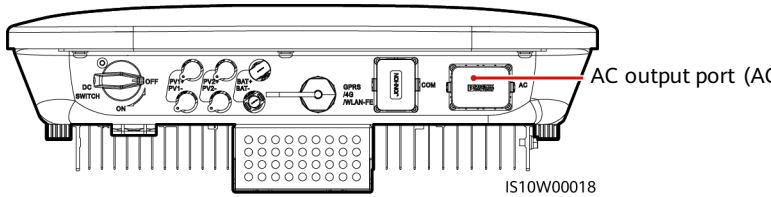

IS10W00018

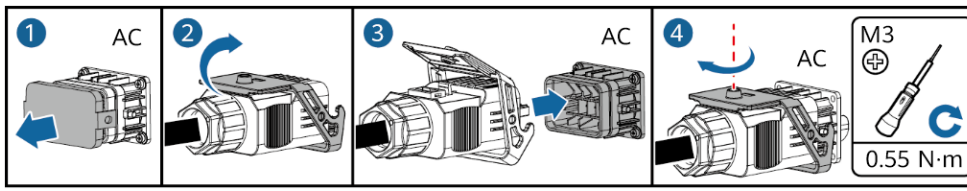

IS10I20005

3. Check the route of the AC output power cable.

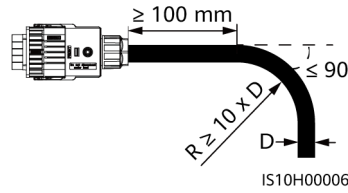

IS10H00006

3.4 Installing the DC Input Power Cable

NOTICE

1. Ensure that the PV module output is well insulated to ground.
2. Use the Staubli MC4 positive and negative metal terminals and DC connectors supplied with the solar inverter. Using incompatible positive and negative metal terminals and DC connectors may result in serious consequences. The caused device damage is not covered under warranty.
3. The DC input voltage of the SUN2000 shall not exceed 1100 V DC under any circumstance.
4. Before installing the DC input power cable, label the cable polarities to ensure correct cable connections.
5. If the DC input power cable is reversely connected, do not operate the DC switch as well as positive and negative connectors immediately. Failing to do so may cause device damage, which is not covered under any warranty. Wait until the night when solar irradiance declines and the PV string current drops to below 0.5 A. Then set the DC switch to the OFF position, remove the positive and negative connectors, and correct the polarities of the DC input power cable.
6. If the PV strings are configured with Smart PV Optimizers, refer to the Smart PV Optimizer Quick Guide to check the cable polarity.

1. Assemble DC connectors.

Correct Wiring Terminals

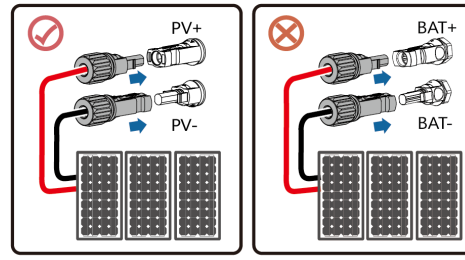

IS10H30010

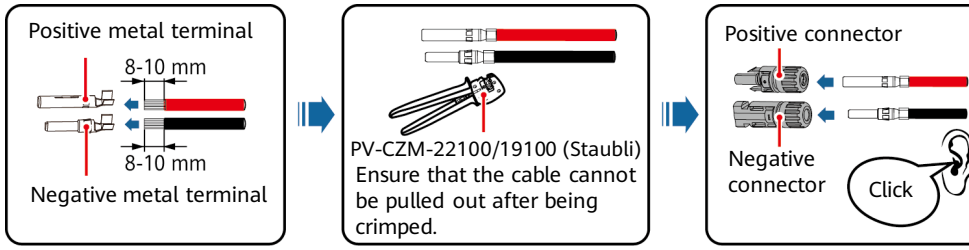

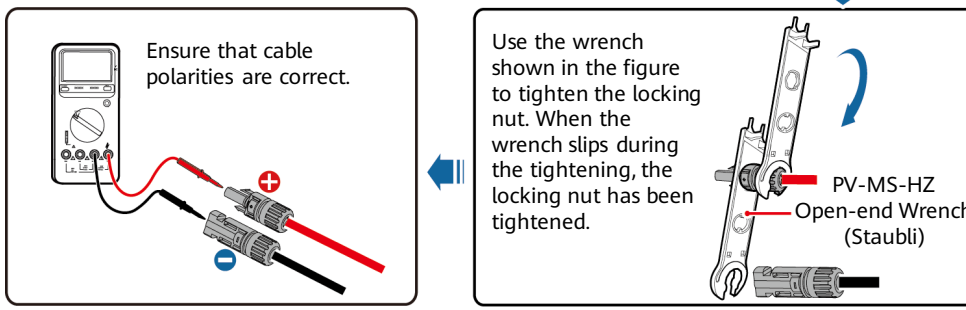

IH07I30001

2. Connect DC input power cables.

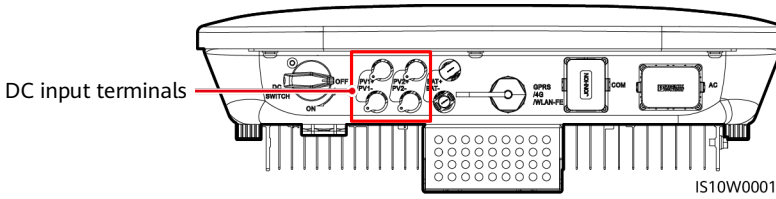

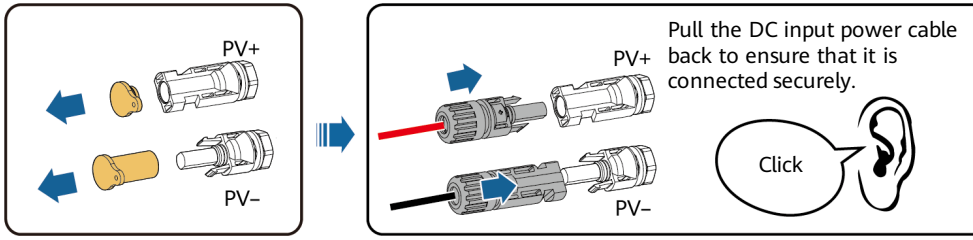

IH07I30002

3.5 (Optional) Installing Battery Cables

DANGER

- Use insulated tools when connecting cables.
- Connect battery cables with correct polarity. If battery cables are reversely connected, the solar inverter may be damaged.

Assemble the positive and negative connectors by following the instructions in section 3.4 "Installing DC Input Power Cables."

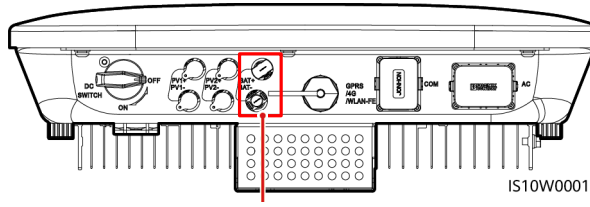

Battery terminals (BAT+/BAT–)

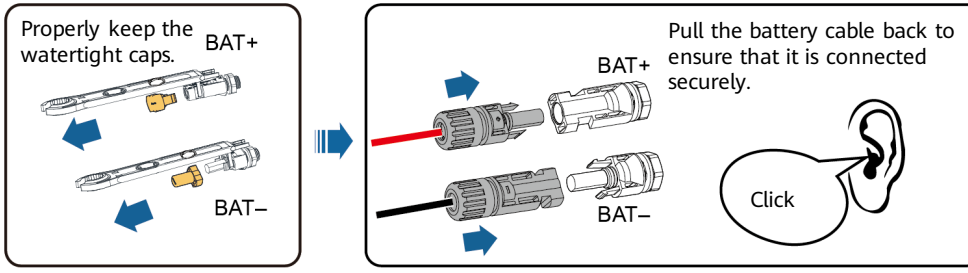

IH07I30003

3.6 Installing the Smart Dongle

NOTE
- If FE communication is used, install a WLAN-FE Smart Dongle (SDongleA-05). The WLAN-FE Smart Dongle is delivered with the SUN2000.
- If 4G communication is used, install a 4G Smart Dongle (SDongleB-06). You need to purchase the 4G Smart Dongle by yourself.

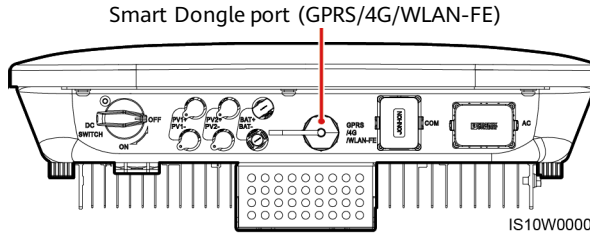

NOTE
- For details about how to operate the WLAN-FE Smart Dongle SDongleA-05, see *SDongleA-05 Smart Dongle Quick Guide (WLAN-FE)*.
- For details about how to operate the 4G Smart Dongle SDongleB-06, see *SDongleB-06 Quick Guide (4G)*.
- The quick guide is delivered with the Smart Dongle. You can download them by scanning the QR code below.

WLAN-FE

4G

WLAN-FE Smart Dongle (FE Communication)

You are advised to use a CAT 5E outdoor shielded network cable (outer diameter < 9 mm; internal resistance ≤ 1.5 Ω/10 m) and shielded RJ45 connectors.

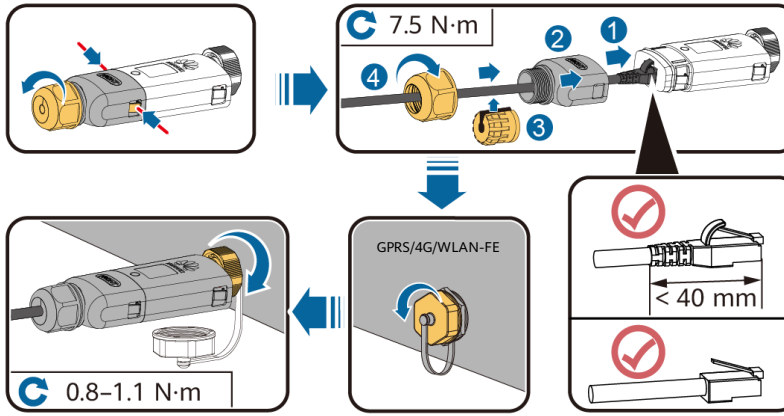

(Optional) 4G Smart Dongle (4G Communication)

NOTICE

- If your Smart Dongle is not equipped with a SIM card, prepare a standard SIM card (size: 25 mm x 15 mm) with the capacity greater than or equal to 64 KB.
- Install the SIM card in the arrow direction.
- When reinstalling the cover of the Smart Dongle, ensure that the buckle springs back in place (you can hear a click).

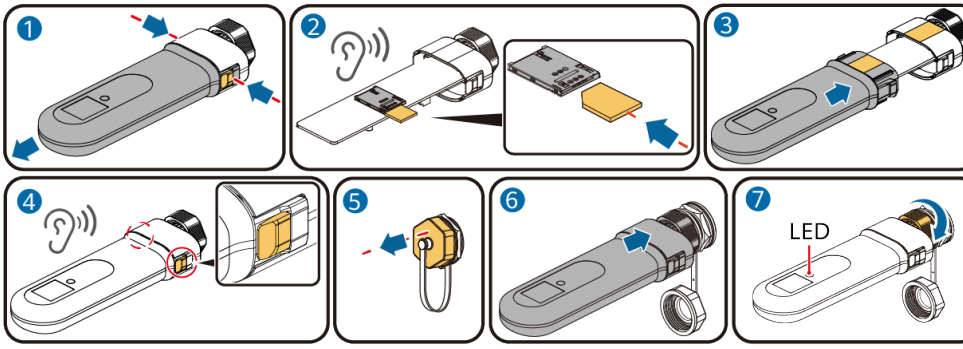

IL04H10042

3.7 (Optional) Installing the Signal Cable

NOTICE

- Not all inverter models are delivered with the signal cable connector.
- When laying out the signal cable, separate it from the power cable and keep it away from strong interference sources to avoid strong communication interference.
- Ensure that the protection layer of the cable is inside the connector, surplus core wires are cut off from the protection layer, the exposed core wire is totally inserted into the cable hole, and that the cable is connected securely.
- If the Smart Dongle is configured, you are advised to install the Smart Dongle before connecting the signal cable.

Communications Port Pin Definition

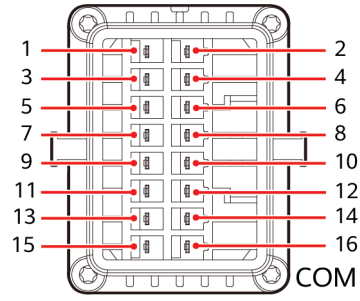

IS10W00002

NOTE

- When the RS485 communications cables of devices such as the Smart Power Sensor and the energy storage device are both connected to the inverter, 485A2 (pin 7), 485B2 (pin 9), and PE (pin 5) are shared.
- When the enable signal cable of the energy storage device and the signal cable of the rapid shutdown switch are both connected to the inverter, GND (pin 13) is shared.

Pin	Definition	Function	Description	Pin	Definition	Function	Description
1	485A1-1	RS485A, RS485 differential signal+	Used for cascading inverters or connecting to the RS485 signal port of the SmartLogger, SmartAssistant or Smart Guard.	2	485A1-2	RS485A, RS485 differential signal+	Used for cascading inverters or connecting to the RS485 signal port of the SmartLogger, SmartAssistant or Smart Guard.
3	485B1-1	RS485B, RS485 differential signal–		4	485B1-2	RS485B, RS485 differential signal–	
5	PE	Shielding ground	N/A	6	PE	Shielding ground	N/A
7	485A2	RS485A, RS485 differential signal+	Used to connect to the RS485 signal port on devices such as the Smart Power Sensor and the energy storage device	8	DIN1	Digital input signal 1+	Connecting to the dry contact for power grid scheduling or used as the feedback signal port for the Backup Box or Smart Guard
9	485B2	RS485B, RS485 differential signal–		10	DIN2	Digital input signal 2+	Dry contact for grid scheduling
11	EN	Enabling signal	Used to connect to the enable signal port on an energy storage device	12	DIN3	Digital input signal 3+	
13	GND	GND	N/A	14	DIN4	Digital input signal 4+	Connecting to the dry contact for power grid scheduling or the ripple control receiver for load power control
15	DIN5	Rapid shutdown signal+	Used for the rapid shutdown DI signal or connecting to the signal cable of an NS protection device	16	GND	GND of DIN1/DIN2/ DIN3/DIN4	Connecting to GND of DIN1, DIN2, DIN3, or DIN4

Smart Dongle Networking Scenario

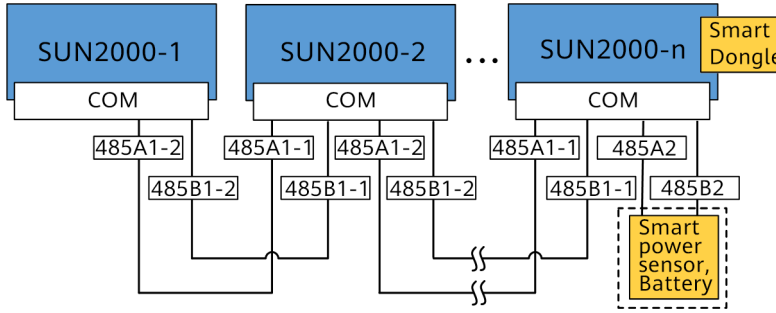

NOTE

- In the Smart Dongle networking scenario, the SmartLogger cannot be connected.
- The Smart Power Sensor is necessary for export limitation. Select the Smart Power Sensor according to the actual project.
- A maximum of 10 devices can be connected to the WLAN-FE and 4G Smart Dongles. The Smart Power Sensors connected to the RS485A2 and RS485B2 ports are not included.
- If a battery is connected, a maximum of three inverters can be cascaded. Any one of the inverters can be connected to the battery. (The inverter connected to the Smart Dongle must be connected to the battery.)
- If the SUN2000-(3KTL–10KTL)-M1 Series and SUN2000-(2KTL–6KTL)-L1 are cascaded, a maximum of three inverters can be cascaded.
- In new-deployment or capacity expansion scenarios with multiple inverters, you are advised to connect either single-phase or three-phase inverters in parallel.

SmartLogger Networking Scenario

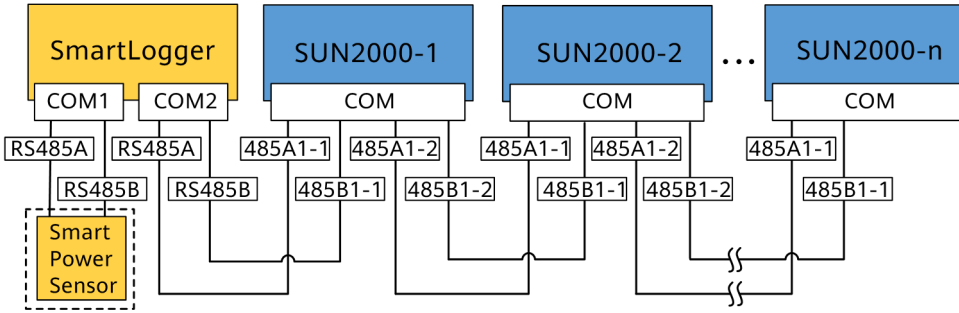

NOTE

- In the SmartLogger networking scenario, the Smart Dongle cannot be connected.
- A maximum of 80 devices can connect to a single SmartLogger, such as inverters, Smart Power sensor, and EMI. You are advised to connect fewer than 30 devices to each RS485 route.
- The Smart Power Sensor is necessary for export limitation. Select the Smart Power Sensor according to the actual project.
- To ensure the system response speed, you can connect the Smart Power Sensor to a separate COM port.

SmartAssistant Networking Scenario

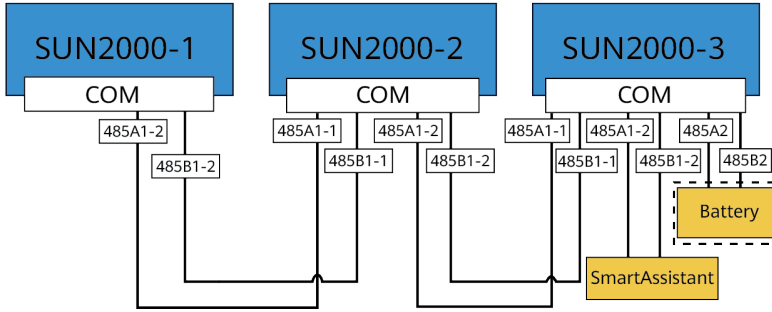

Smart Guard Networking Scenario

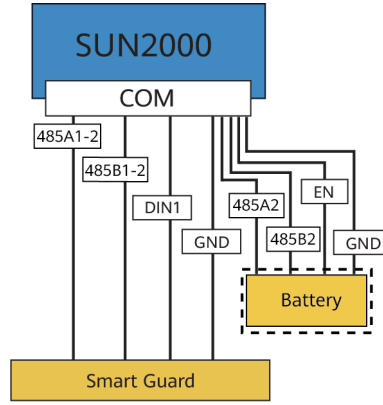

IH10H10047

(Optional) Installing the RS485 Communications Cable (Inverter Cascading)

1. Connect the signal cable to the signal cable connector.

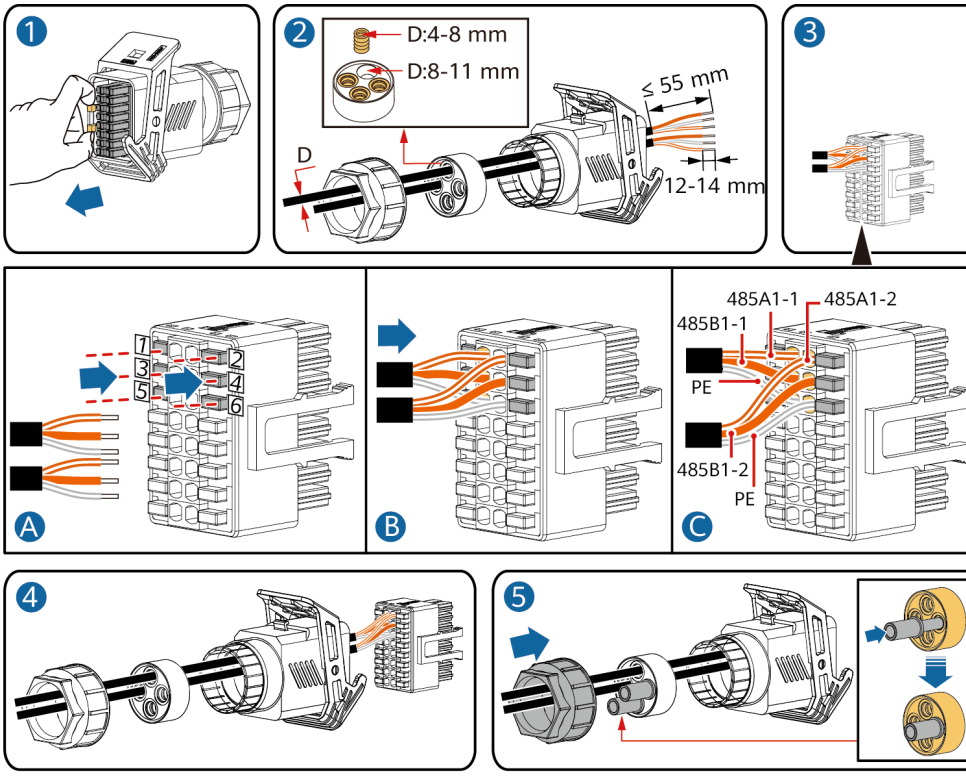

IS10I20006

2. Connect the signal cable connector to the communication port.

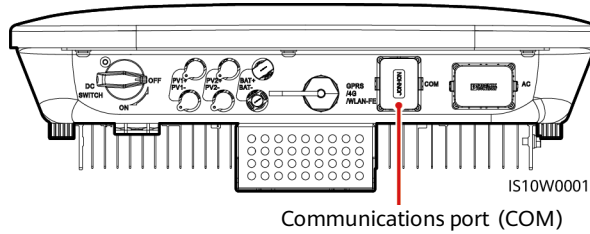

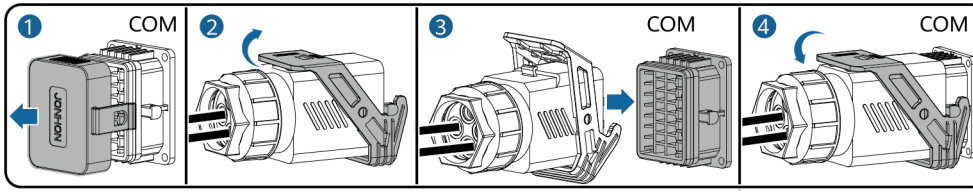

IS10I20007

(Optional) Installing the RS485 Communications Cable (Only Smart Power Sensor Connected)

1. Connect the signal cable to the signal cable connector.

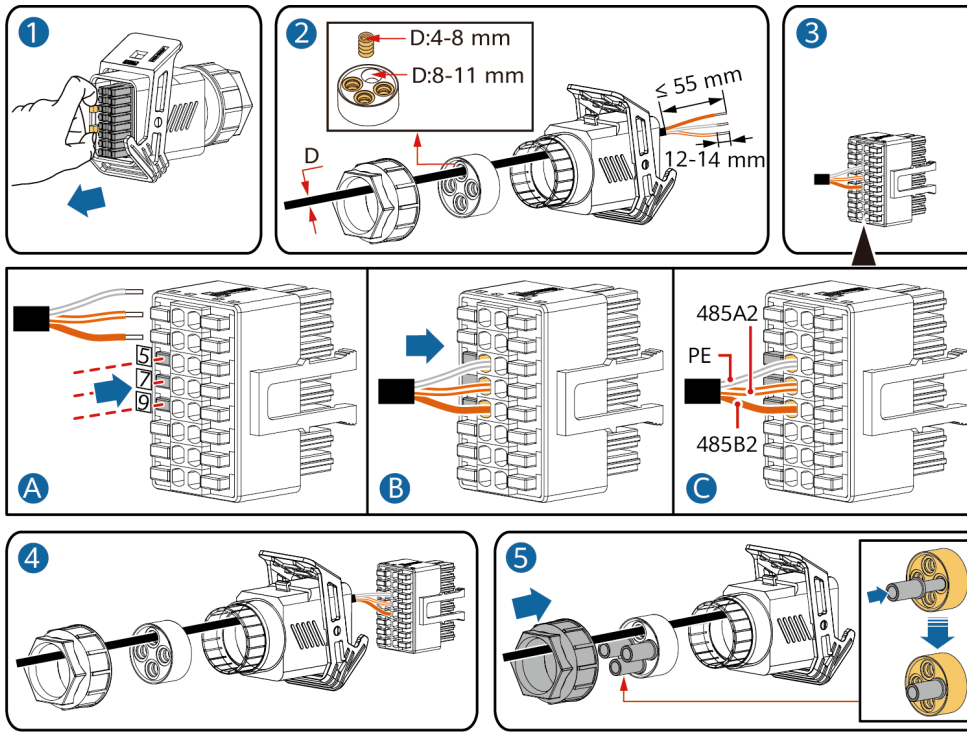

IS10I20008

2. Connect the signal cable connector to the communication port.

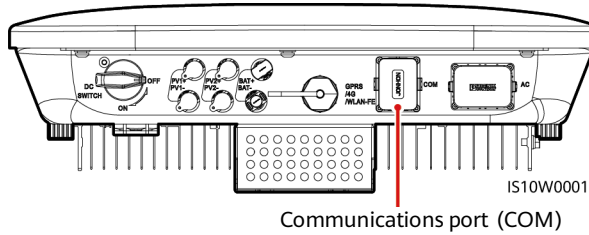

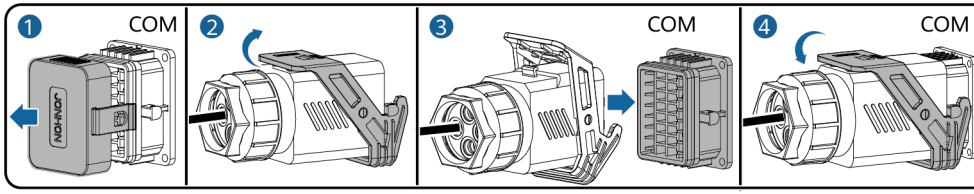

IS10I20007

(Optional) Installing the RS485 Communications Cable (Smart Power Sensor and Energy Storage Device Connected)

1. Connect the signal cable to the signal cable connector.

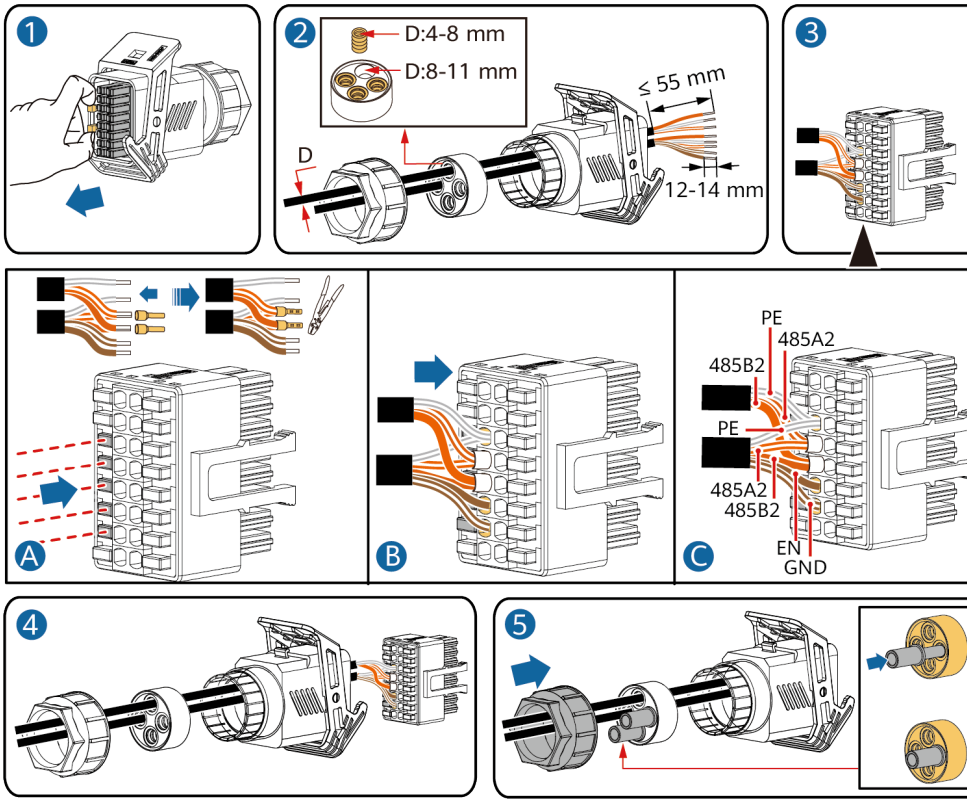

IS10I20012

2. Connect the signal cable connector to the Communication port.

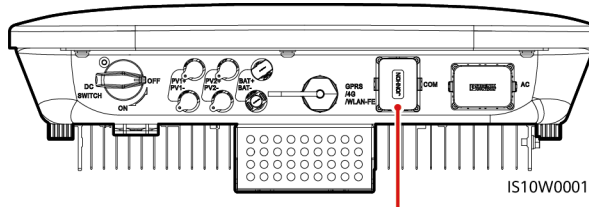

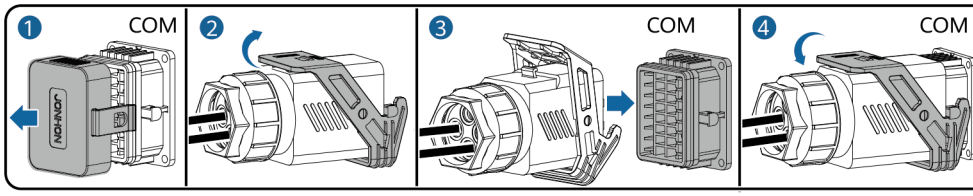

IS10I20007

(Optional) Installing the RS485 Communications Cable (SmartAssistant)

1. Connect the signal cable to the signal cable connector.

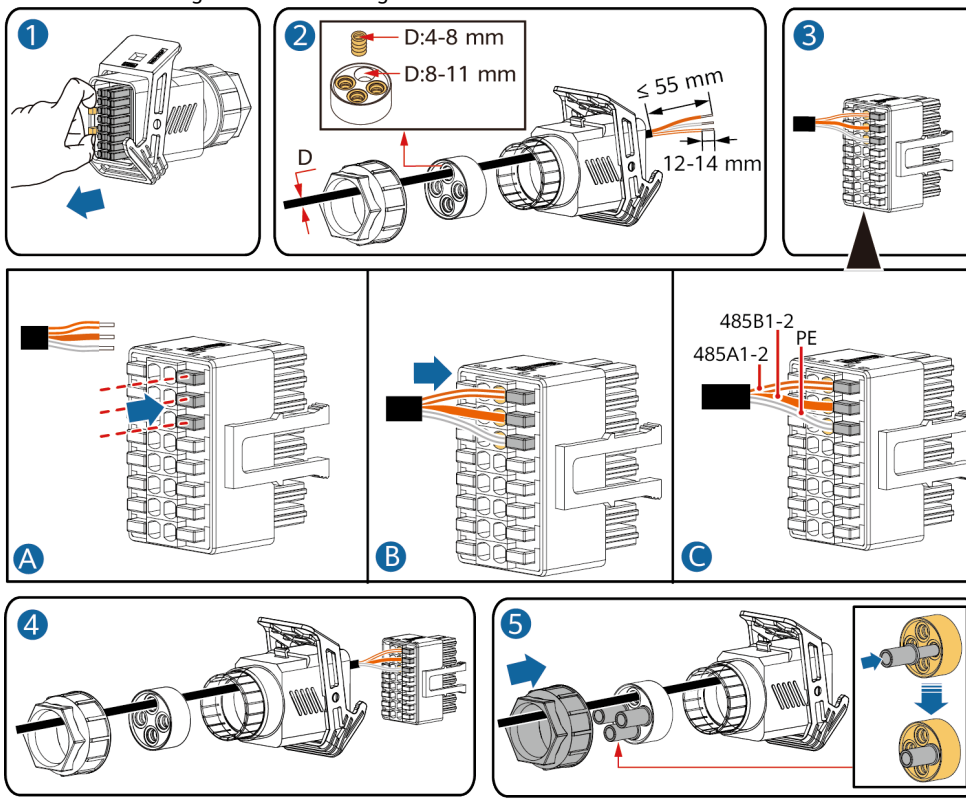

IS08I20002

2. Connect the signal cable connector to the communication port.

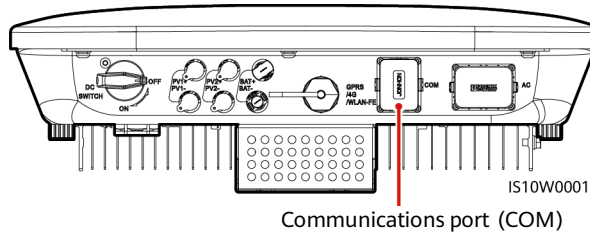

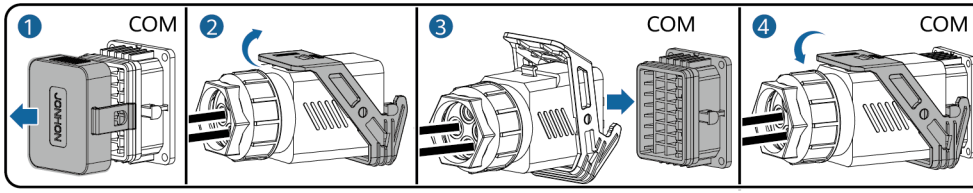

IS10I20007

(Optional) Installing the RS485 Communications Cable (SmartAssistant and Battery)

1. Connect the signal cable to the signal cable connector.

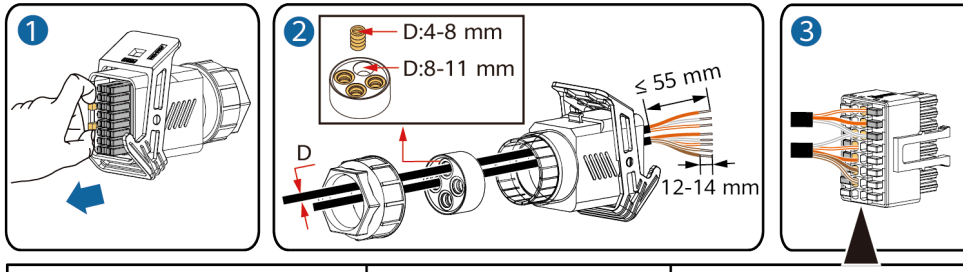

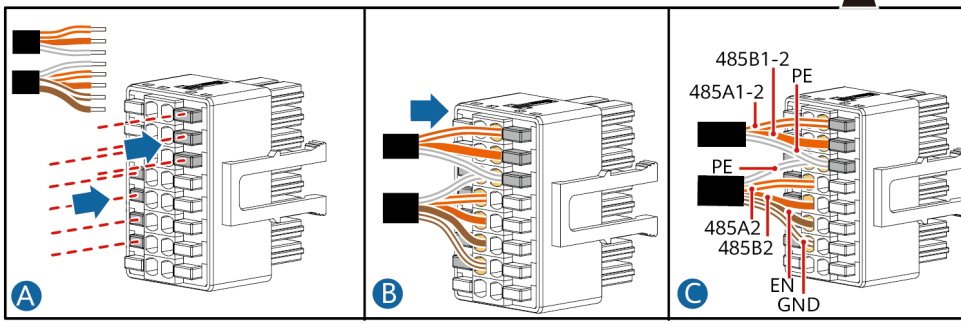

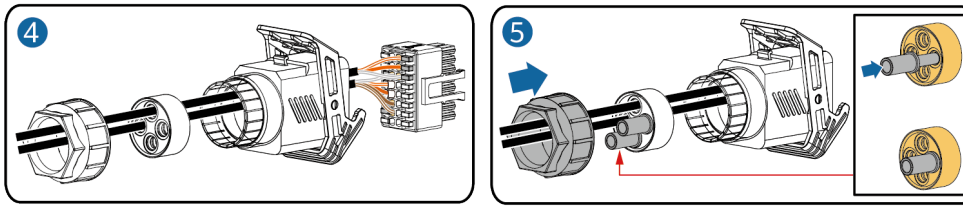

IS08I20001

2. Connect the signal cable connector to the communication port.

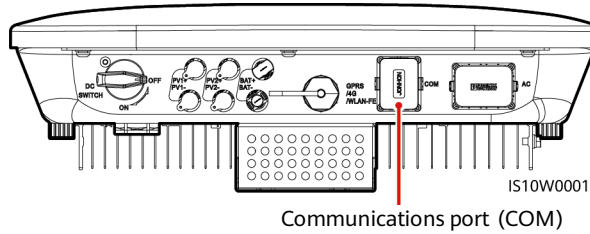

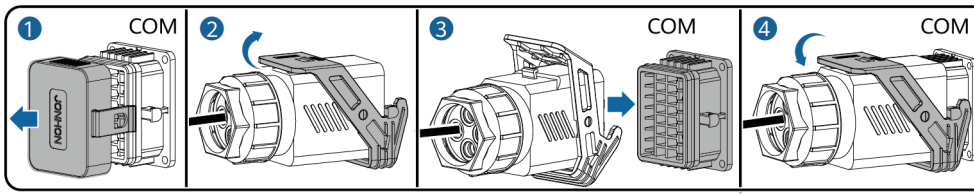

IS10I20007

(Optional) Installing the RS485 Communications Cable (Smart Guard)

1. Connect the signal cable to the signal cable connector.

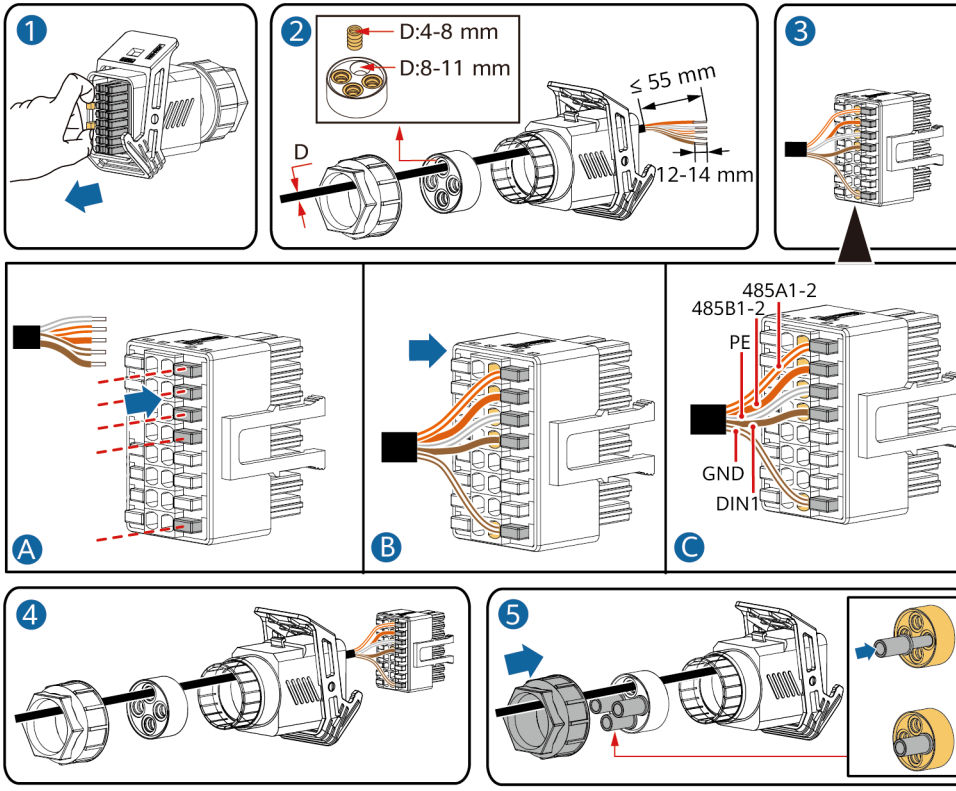

IS08I20001

2. Connect the signal cable connector to the communication port.

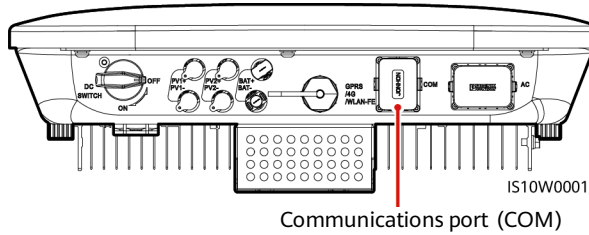

IS10W00018

Communications port (COM)

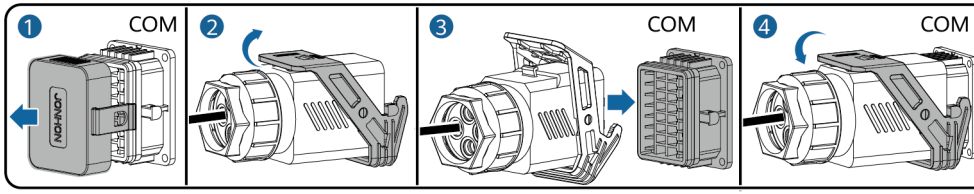

IS10I20007

(Optional) Installing the Grid Scheduling Dry Contact Signal Cable

1. Connect the signal cable to the signal cable connector.

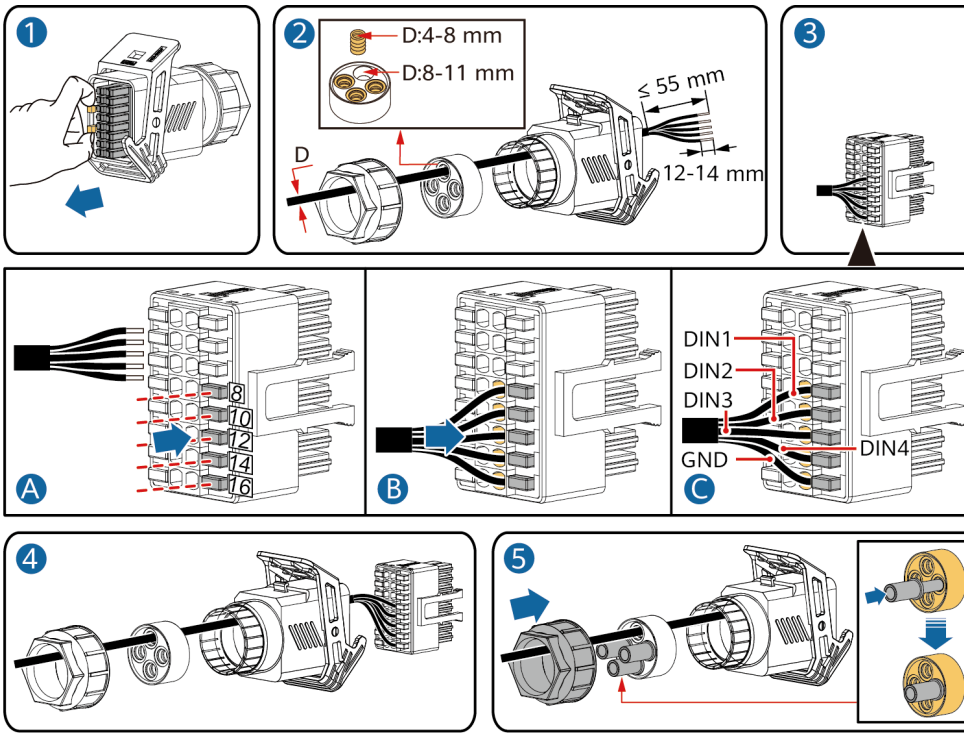

IS10I20010

2. Connect the signal cable connector to the Communication port.

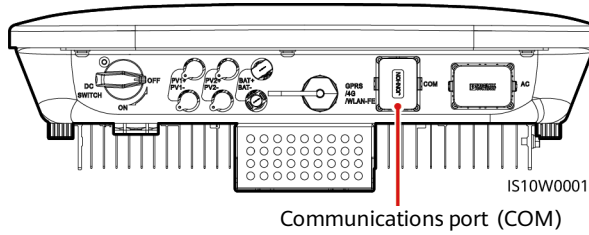

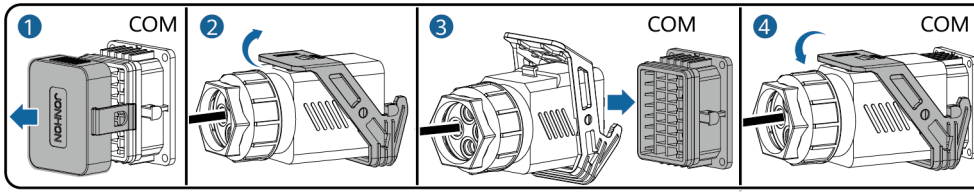

IS10I20007

(Optional) Installing Signal Cables for a Smart Backup Box

1. Connect the signal cable to the signal cable connector.

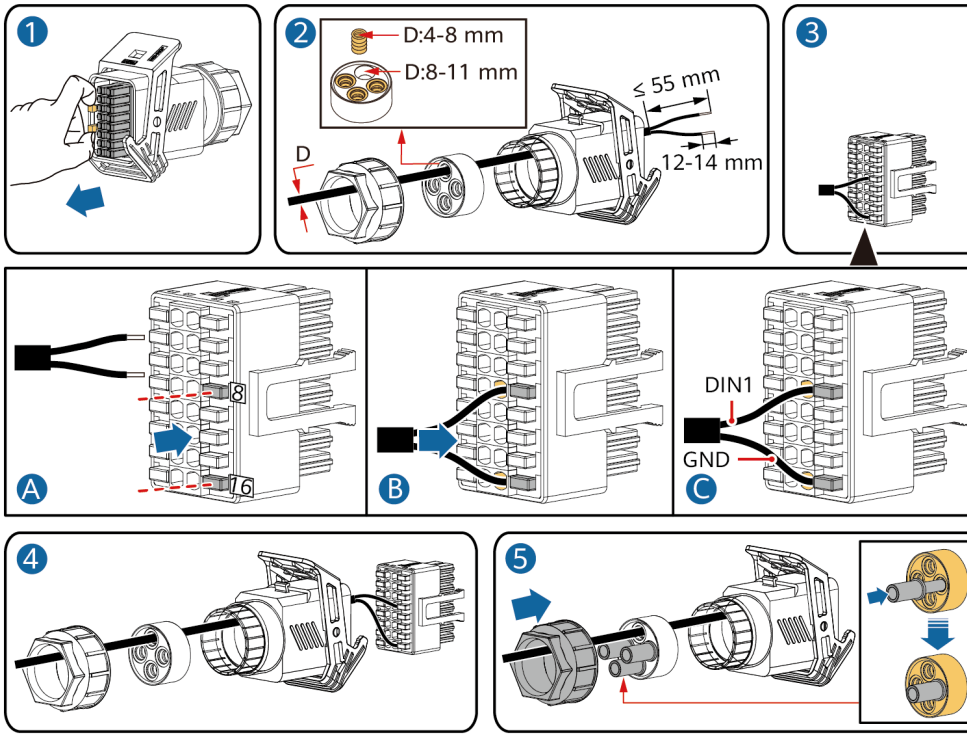

IS10I20018

2. Connect the signal cable connector to the Communication port.

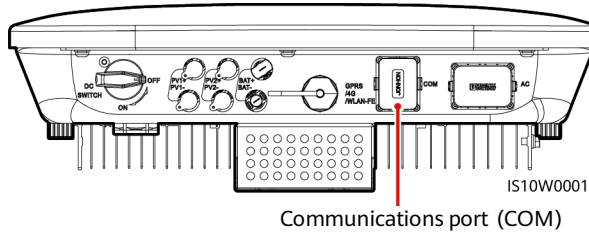

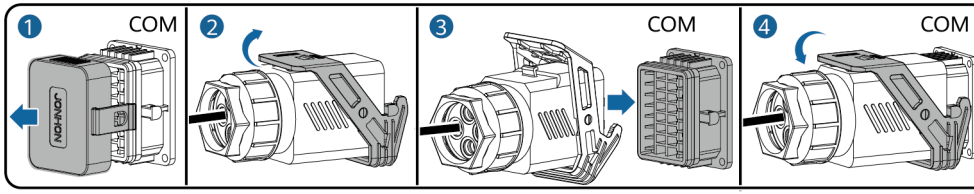

IS10I20007

4 Verifying Installation

No.	Acceptance Criteria
1	The inverter is installed correctly and securely.
2	Cables are routed properly as required by the customer.
3	The Smart Dongle is installed correctly and securely.
4	Cable ties are evenly distributed and no burr exists.
5	The PE cable is connected correctly, securely, and reliably.
6	The DC switch and all the switches connected to the inverter are set to the OFF position.
7	The AC output power cable, DC input power cable, battery cable, and signal cable are connected correctly and securely.
8	Unused terminals and ports are locked by watertight caps.
9	The installation space is proper, and the installation environment is clean and tidy.

5 Powering On the System

NOTICE

Before turning on the AC switch between the solar inverter and the power grid, check that the AC voltage is within the specified range using a multimeter set to the AC position.

1. If a battery is connected, turn on the battery switch.
2. Turn on the AC switch between the solar inverter and the power grid.
3. (Optional) Remove the screw for locking the DC switch.

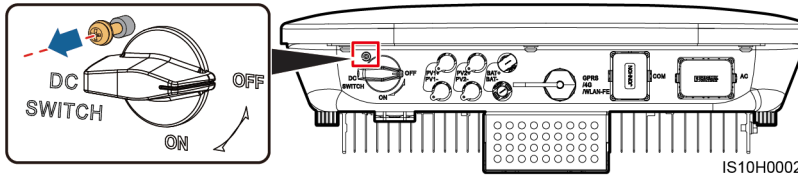

4. Turn on the DC switch (if any) between the PV string and the solar inverter.
5. Turn on the DC switch at the bottom of the solar inverter.

6. Observe the LEDs to check the operating status of the inverter.

Type	**Status** (Blinking at long intervals: On for 1s and then Off for 1s; Blinking at short Intervals: On for 0.2s and then Off for 0.2s)		**Meaning**
Running indication			N/A
	Steady green	Steady green	The solar inverter is operating in grid-tied mode.
	Blinking green at long intervals	Off	The DC is on and the AC is off.
	Blinking green at long intervals	Blinking green at long intervals	Both the DC and AC are on, and the solar inverter is not exporting power to the power grid.
	Off	Blinking green at long intervals	The DC is off and the AC is on.
	Off	Off	Both the DC and AC are off.
	Blinking red at short intervals	N/A	There is a DC environmental alarm, such as an alarm indicating that High String Input Voltage, String Reverse Connection, or Low Insulation Resistance.
	N/A	Blinking red at short intervals	There is an AC environmental alarm, such as an alarm indicating Grid Undervoltage, Grid Overvoltage, Grid Overfrequency, or Grid Underfrequency.
	Steady red	Steady red	Fault.
Communication indication			N/A
	Blinking green at short intervals		Communication is in progress.
	Blinking green at long intervals		A mobile phone is connected to the solar inverter.
	Off		There is no communication.
Device replacement indication		 	N/A
	Steady red	Steady red Steady red	The solar inverter hardware is faulty. The solar inverter needs to be replaced.

7. (Optional) Observe the LED to check the operating status of the Smart Dongle.

WLAN-FE Smart Dongle

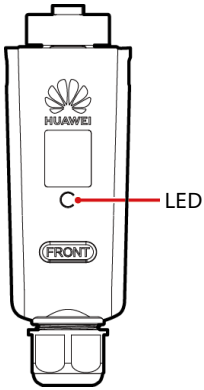

LED		Description
Color	Status	
Yellow (blinking green and red simultaneously)	Steady on	The Dongle is secured and powered on.
Red	Blinking at short intervals (on for 0.2s and then off for 0.2s)	The parameters for connecting to the router are to be set.
Green	Blinking at long intervals (on for 0.5s and then off for 0.5s)	Connecting to the router
Green	Steady on	Successfully connected to the management system.
Green	Blinking at short intervals (on for 0.2s and then off for 0.2s)	The inverter is communicating with the management system through the Dongle.

4G Smart Dongle

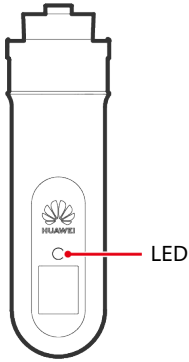

LED		Description
Color	Status	
Yellow (blinking green and red simultaneously)	Steady on	The Dongle is secured and powered on.
Green	Blinking in a 2-second cycle (on for 0.1s and then off for 1.9s)	Dialing (duration < 1 min)
Green	Blinking at long intervals (on for 1s and then off for 1s)	The dial-up connection is set up successfully (duration < 30s).
Green	Steady on	Successfully connected to the management system.
Green	Blinking at short intervals (on for 0.2s and then off for 0.2s)	The inverter is communicating with the management system through the Dongle.

6 Resetting the Password

1. Ensure that the SUN2000 connects to the AC and DC power supplies at the same time. Indicators ⊐[and]~ are steady green or blinking slowly for more than 3 minutes.
2. Perform the following operations within 4 minutes:
   a. Turn off the AC switch and set the DC SWITCH at the bottom of the SUN2000 to OFF. If the SUN2000 connects to batteries, turn off the battery switch. Wait until all the LED indicators on the SUN2000 panel turn off.
   b. Turn on the AC switch, set the DC SWITCH to ON, and wait for about 90s. Ensure that the indicator]~ is blinking green slowly.
   c. Turn off the AC switch and set the DC SWITCH to OFF. Wait until all LED indicators on the SUN2000 panel turn off.
   d. Turn on the AC switch and set the DC SWITCH to ON. Wait until all indicators on the SUN2000 panel blink and turn off 30 seconds later.

3. Reset the password within 10 minutes. (If no operation is performed within 10 minutes, all inverter parameters remain unchanged.)
   a. Wait until the indicator blinks green slowly.
   b. Obtain the initial WLAN hotspot name (SSID) and initial password (PSW) from the label on the side of the SUN2000 and connect to the SUN2000 on the app.
   c. On the login screen, set a new login password and log in to the app.
4. Set router and management system parameters to implement remote management.

7 Installation Video

NOTE

You can scan the QR code below to obtain the installation video.

8 Contact Information

https://digitalpower.huawei.com

Path: **About Us** > **Contact Us** > **Service Hotlines**

9 Digital Power Customer Service

https://digitalpower.huawei.com/robotchat/

English

EMC Information

- Equipment with a rated input current greater than 16 A and less than or equal to 75 A per phase shall comply with IEC 61000-3-12.
- This device is class B equipment of group 1.
    - Class B equipment: Equipment suitable for use in locations in residential environments and in establishments directly connected to a low voltage power supply network which supplies buildings used for domestic purposes.
    - Group 1 equipment: Group 2 contains all industrial, scientific, and medical (ISM) RF equipment in which radio-frequency energy in the frequency range of 9 kHz to 400 GHz is intentionally generated and used or only used locally, in the form of electromagnetic radiation, inductive and/or capacitive coupling, for the treatment of material, for inspection/analysis purposes, or for transfer of electromagnetic energy. Group 1 contains all equipment which is not classified as group 2 equipment.

Deutsch

Informationen zur EMV

- Geräte mit einem Nenneingangsstrom von mehr als 16 A und höchstens 75 A pro Phase müssen der Norm IEC 61000-3-12 entsprechen.
- Dieses Gerät ist ein Gerät der Klasse B der Gruppe 1.
    - Geräte der Klasse B: Geräte, die für den Einsatz in Wohngebieten und in Einrichtungen geeignet sind, die direkt an ein Niederspannungsnetz angeschlossen sind, das Wohngebäude versorgt.
    - Geräte der Gruppe 1: Gruppe 2 umfasst alle industriellen, wissenschaftlichen und medizinischen HF-Geräte (ISM-Geräte) in denen Hochfrequenzenergie im Frequenzbereich von 9 kHz bis 400 GHz absichtlich erzeugt und verwendet oder nur lokal in Form von elektromagnetischer Strahlung, induktiver und/oder kapazitiver Kopplung zur Behandlung von Materialien, zu Inspektions-/Analysezwecken oder zur Übertragung von elektromagnetischer Energie verwendet wird. Gruppe 1 umfasst alle Geräte, die nicht als Geräte der Gruppe 2 eingestuft sind.

Español

Información de EMC

- Los equipos con una corriente de entrada nominal superior a 16 A e inferior o igual a 75 A por fase deberán cumplir la norma IEC 61000-3-12.
- Este es un equipo de clase B del grupo 1.
    - Equipos de clase B: Equipos adecuados para su uso en entornos residenciales y en establecimientos conectados directamente a una red eléctrica de bajo voltaje que abastece a edificios de viviendas.
    - Equipos de grupo 1: El grupo 2 incluye todos los equipos de radiofrecuencia industriales, científicos y médicos (ISM) en los que se genera y utiliza intencionadamente energía de radiofrecuencia en la gama de frecuencias de 9 kHz a 400 GHz o solo se utiliza localmente, en forma de radiación electromagnética, acoplamiento inductivo y/o capacitivo, para el tratamiento de materiales, para fines de inspección/análisis o para la transferencia de energía electromagnética. El grupo 1 incluye todos los equipos que no están clasificados como equipos del grupo 2.

Français

Informations sur la CEM

- Les équipements avec un courant d'entrée nominal supérieur à 16 A et inférieur ou égal à 75 A par phase doivent être conformes à la norme CEI 61000-3-12.
- Cet appareil est un équipement de classe B du groupe 1.
    - Équipement de classe B : les équipements adaptés à une utilisation dans des environnements résidentiels et dans des établissements directement connectés à un réseau d'alimentation à basse tension qui alimente des bâtiments à usage domestique.
    - Équipements du groupe 1 : le groupe 2 comprend tout l'équipement radiofréquence (RF) à usage industriel, scientifique et médical (ISM) qui génère et utilise intentionnellement, ou uniquement localement, de l'énergie radiofréquence dans la bande de fréquences allant de 9 kHz à 400 GHz sous forme de rayonnement électromagnétique, de couplage inductif et/ou capacitif, pour le traitement de matériaux, à des fins d'inspection/analyse ou pour le transfert d'énergie électromagnétique. Le groupe 1 comprend tout l'équipement qui n'est pas classé comme équipement du groupe 2.

Italiano

Informazioni CEM

- Le apparecchiature con una corrente in ingresso nominale superiore a 16 A e inferiore o uguale a 75 A per fase devono essere conformi alla norma IEC 61000-3-12.
- Questo dispositivo è un'apparecchiatura di classe B del gruppo 1.
    - Apparecchiature di classe B: apparecchiature adatte all'uso in ambienti residenziali e in stabilimenti collegati direttamente a una rete di alimentazione elettrica a bassa tensione che alimenta edifici adibiti a uso domestico.
    - Apparecchiature del gruppo 1: il gruppo 2 comprende tutte le apparecchiature industriali, scientifiche e mediche (ISM) a radiofrequenza in cui l'energia a radiofrequenza nell'intervallo di frequenza da 9 kHz a 400 GHz è generata e utilizzata intenzionalmente o solo utilizzata localmente, sotto forma di radiazioni elettromagnetiche, accoppiamento induttivo e/o capacitivo, per il trattamento di materiali, per scopi di ispezione/analisi o per il trasferimento di energia elettromagnetica. Il gruppo 1 comprende tutte le apparecchiature che non sono classificate come apparecchiature del gruppo 2.

中文

EMC信息

- 每相额定输入电流大于16A但不超过75A的设备遵从IEC 61000-3-12的要求。
- 本设备是1组B类设备。
    - B类设备：家用设备和直接连接到住宅低压供电网设施中使用的设备。
    - 1组设备：2组设备为包括以电磁辐射、感性和/或容性耦合形式，有意产生并使用或局部使用9 kHz～400 GHz频段内射频能量的，所有用于材料处理或检验/分析目的，或用于传输电磁能量的工业、科学、医疗射频设备。1组设备为除2组设备以外的设备。

British English

EMC Information

- Equipment with a rated input current greater than 16 A and less than or equal to 75 A per phase shall comply with IEC 61000-3-12.
- This device is class B equipment of group 1.
    - Class B equipment: Equipment suitable for use in locations in residential environments and in establishments directly connected to a low voltage power supply network which supplies buildings used for domestic purposes.
    - Group 1 equipment: Group 2 contains all industrial, scientific, and medical (ISM) RF equipment in which radio-frequency energy in the frequency range of 9 kHz to 400 GHz is intentionally generated and used or only used locally, in the form of electromagnetic radiation, inductive and/or capacitive coupling, for the treatment of material, for inspection/analysis purposes, or for transfer of electromagnetic energy. Group 1 contains all equipment which is not classified as group 2 equipment.

Nederlands

Informatie over EMC

- Apparatuur met een nominale ingangsstroom van meer dan 16 A en minder dan of gelijk aan 75 A per fase moet voldoen aan IEC 61000-3-12.
- Dit is een apparaat van klasse B van groep 1.
    - Klasse B-apparatuur: Apparatuur die geschikt is voor gebruik in locaties in residentiële omgevingen en in vestigingen die direct zijn aangesloten op een voedingsnetwerk met lage spanning dat gebouwen die worden gebruikt voor huishoudelijke doeleinden van voeding voorziet.
    - Apparatuur van groep 1: Groep 2 bevat alle industriële, wetenschappelijke en medische (ISM) RF-apparatuur waarin radiofrequentie-energie in het frequentiebereik van 9 kHz tot 400 GHz opzettelijk wordt gegenereerd en gebruikt of alleen lokaal wordt gebruikt, in de vorm van elektromagnetische straling, inductieve en/of capacitieve koppeling, voor de behandeling van materiaal, voor inspectie-/analysedoeleinden of voor de overdracht van elektromagnetische energie. Groep 1 bevat alle apparatuur die niet is geclassificeerd als groep 2-apparatuur.

Polski

Informacje dotyczące kompatybilności elektromagnetycznej (EMC)

- Sprzęt o znamionowym prądzie wejściowym większym niż 16 A i nieprzekraczającym 75 A na fazę musi być zgodny z normą IEC 61000-3-12.
- To urządzenie jest sprzętem klasy B grupy 1.
    - Sprzęt klasy B: Sprzęt przeznaczony do użytku w środowiskach mieszkalnych oraz w obiektach bezpośrednio przyłączonych do publicznej sieci zasilającej niskiego napięcia, która zasila budynki wykorzystywane do celów domowych.
    - Sprzęt grupy 1: Grupa 2 obejmuje cały przemysłowy, naukowy i medyczny (ISM) sprzęt radiowy, w którym energia o częstotliwości radiowej w zakresie od 9 kHz do 400 GHz jest celowo wytwarzana i wykorzystywana lub wykorzystywana tylko lokalnie, w postaci promieniowania elektromagnetycznego, sprzężenia indukcyjnego i/lub pojemnościowego, do obróbki materiałów, do celów inspekcyjnych/analitycznych lub do transferu energii elektromagnetycznej. Grupa 1 obejmuje wszelki sprzęt, który nie został sklasyfikowany jako sprzęt grupy 2.

Português (Brasil)

Informações sobre o EMC

- Equipamentos com corrente nominal de entrada maior que 16 A e menor ou igual a 75 A por fase devem estar em conformidade com a IEC 61000-3-12.
- Esse dispositivo é um equipamento de classe B do grupo 1.
    - Equipamento de classe B: Equipamento adequado para uso em locais em ambientes residenciais e em estabelecimentos diretamente conectados a uma rede de fornecimento de energia de baixa tensão que abastece edifícios usados para fins domésticos.
    - Equipamento de grupo 1: O grupo 2 contém todos os equipamentos de RF industriais, científicos e médicos (ISM) nos quais a energia de radiofrequência na faixa de frequência de 9 kHz a 400 GHz é intencionalmente gerada e usada ou apenas usada localmente, na forma de radiação eletromagnética, acoplamento indutivo e/ou capacitivo, para tratamento de material, para fins de inspeção/análise ou para transferência de energia eletromagnética. O grupo 1 contém todos os equipamentos que não são classificados como equipamentos do grupo 2.

Shqip

Informacion mbi Përputhshmërinë Elektromagnetike (EMC)

- Pajisjet me një rrymë hyrëse nominale më të madhe se 16 A dhe më të vogël ose të barabartë me 75 A për fazë duhet të jenë në përputhje me IEC 61000-3-12.
- Kjo pajisje është pajisje e klasit B të grupit 1.
    - Pajisjet e klasit B: Pajisje të përshtatshme për përdorim në mjedise banimi dhe në institucione të lidhura drejtpërdrejt me një rrjet furnizimi me energji elektrike me tension të ulët që furnizon ndërtesat e përdorura për banim.
    - Pajisjet e grupit 1: Grupi 2 përmban të gjitha pajisjet industriale, shkencore dhe mjekësore (ISM) me frekuenca radio në të cilat energjia e frekuencës radio në diapazonin e frekuencave nga 9 kHz deri në 400 GHz gjenerohet dhe përdoret qëllimisht ose përdoret vetëm lokalisht, në formën e rrezatimit elektromagnetik, çiftëzimit induktiv dhe/ose kapacitiv, për trajtimin e materialit, për qëllime inspektimi/analize ose për transferimin e energjisë elektromagnetike. Grupi 1 përmban të gjitha pajisjet që nuk klasifikohen si pajisje të grupit 2.

Bosanski

Informacije o EMC-u

- Oprema s nazivnom ulaznom strujom većom od 16 A i manjom ili jednakom 75 A po fazi treba biti usklađena s normom IEC 61000-3-12.
- Ovaj uređaj je oprema klase B i 1. grupe.
    - Oprema klase B: Oprema pogodna za upotrebu na lokacijama u stambenom okruženju i u objektima direktno povezanim s niskonaponskom mrežom koja napaja zgrade namijenjene za stanovanje.
    - Oprema 1. grupe: 2. grupa obuhvata svu industrijsku, naučnu i medicinsku (ISM) RF opremu u kojoj se radiofrekvencijska energija u frekvencijskom opsegu od 9 kHz do 400 GHz namjenski generira i koristi, ili se koristi samo lokalno, u obliku elektromagnetnog zračenja, induktivnog i/ili kapacitivnog spajanja, za obradu materijala, u svrhe inspekcije ili analize, ili za prijenos elektromagnetne energije. 1. grupa obuhvata svu opremu koja nije klasificirana kao oprema 2. grupe.

Български

Информация за електромагнитна съвместимост (EMC)

- Оборудването с номинален входен ток, по-голям от 16 A и по-малък или равен на 75 A на фаза, трябва да отговаря на IEC 61000-3-12.
- Това устройство е оборудване клас B от група 1.
    - Оборудване от клас B: Оборудване, подходящо за използване на места в жилищна среда и в обекти, пряко свързани към мрежа за ниско напрежение, която захранва сгради, използвани за битови нужди.
    - Оборудване от група 1: Група 2 включва цялото индустриално, научно и медицинско (ISM) радиочестотно оборудване, при което радиочестотна енергия в честотния диапазон от 9 kHz до 400 GHz се генерира умишлено и се използва, или се използва само локално, под формата на електромагнитно излъчване, индуктивно и/или капацитивно свързване, за обработка на материали, с цел инспекция/анализ или за пренос на електромагнитна енергия. Група 1 включва цялото оборудване, което не е класифицирано като оборудване от група 2.

Hrvatski

Informacije o EMC-u

- Oprema s nazivnom ulaznom strujom većom od 16 A i manjom ili jednakom 75 A po fazi mora biti u skladu s normom IEC 61000-3-12.
- Ovaj uređaj oprema je klase B skupine 1.
    - Oprema klase B: Oprema pogodna za korištenje u stambenim okruženjima i u ustanovama direktno povezanim na niskonaponsku elektroenergetsku mrežu koja opskrbljuje zgrade namijenjene za domaćinstva.
    - Oprema skupine 1: Skupina 2 obuhvaća svu industrijsku, znanstvenu i medicinsku (ISM) RF opremu kod koje se radiofrekventna energija u frekvencijskom rasponu od 9 kHz do 400 GHz namjerno generira i koristi, ili se koristi samo lokalno, u obliku elektromagnetskog zračenja, induktivne i/ili kapacitivne sprege, za obradu materijala, za svrhe inspekcije/analize ili za prijenos elektromagnetske energije. Skupina 1 sadrži svu opremu koja nije klasificirana kao oprema skupine 2.

Česky

Informace o EMC

- Zařízení se jmenovitým vstupním proudem větším než 16 A a menším nebo rovným 75 A na fázi musí splňovat IEC 61000-3-12.
- Toto zařízení je zařízení třídy B skupiny 1.
    - Zařízení třídy B: Zařízení vhodné k použití na místech v domácím prostředí a v zařízeních přímo připojených k síti napájení nízkého napětí, která zásobuje budovy používané pro domácí účely.
    - Zařízení skupiny 1: Skupina 2 obsahuje všechna průmyslová, vědecká a lékařská (ISM) radiofrekvenční zařízení, v nichž je záměrně vytvářena a používána radiofrekvenční energie ve frekvenčním rozsahu 9 kHz až 400 GHz a je generována a používána nebo jen používána lokálně, ve formě elektromagnetického záření, indukční a/nebo kapacitní vazby, ke zpracování materiálu, pro inspekční/analytické účely nebo pro přenos elektromagnetické energie. Skupina 1 obsahuje všechna zařízení, která nejsou klasifikována jako zařízení skupiny 2.

Dansk

EMC-oplysninger

- Udstyr med en nominel indgangsstrømstyrke, der er større end 16 A og mindre end eller lig med 75 A per fase, skal overholde IEC 61000-3-12.
- Denne enhed er et klasse B-udstyr i gruppe 1.
    - Klasse B-udstyr: Udstyr egnet til brug på placeringer i boligmiljøer og i installationer, som er direkte tilsluttet et lavspændingsnet, der forsyner bygninger, som anvendes til boligformål.
    - Gruppe 1-udstyr: Gruppe 2 indeholder alt industrielt, videnskabeligt og medicinsk (ISM) RF-udstyr, hvor radiofrekvensenergi i frekvensintervallet 9 kHz-400 GHz forsætligt genereres og bruges eller kun bruges lokalt i form af elektromagnetisk stråling, induktiv og/eller kapacitiv kobling til behandling af materiale med henblik på inspektion/analyse eller overførsel af elektromagnetisk energi. Gruppe 1 indeholder alt udstyr, der ikke er klassificeret som gruppe 2-udstyr.

Eesti

Elektromagneetilise ühilduvuse teave

- Seadmed, mille nimisisendvool on suurem kui 16 A ja väiksem kui 75 A faasi kohta või sellega võrdne, peavad vastama standardile IEC 61000-3-12.
- See seade kuulub I seadmerühma B-klassi seadmete hulka.
    - B-klassi seade: seadmed, mis sobivad kasutamiseks elamutes ja asutustes, mis on ühendatud otse kodumajapidamisi varustava madalpinge toitevõrguga.
    - I seadmerühma seade: II seadmerühm sisaldab kõiki tööstuslikke, teaduslikke ja meditsiinilisi raadiosagedusseadmeid, milles tahtlikult genereeritakse ja kasutatakse või ainult kasutatakse kohalikult raadiosageduslikku energiat sagedusalas 9 kHz kuni 400 GHz elektromagnetkiirguse, induktiivse ja/või mahtuvusliku sidestuse kujul materjali töötlemiseks, kontrolli/analüüsi otstarbel või elektromagnetilise energia ülekandmiseks. I seadmerühma kuuluvad kõik seadmed, mis ei kuulu II seadmerühma.

Suomi

Sähkömagneettisen yhteensopivuuden (EMC) tiedot

- Vaihenimellisvirraltaan yli 16 A:n ja alle 75 A:n laitteen tulee noudattaa standardia IEC 61000-3-12.
- Tämä laite on ryhmän 1 luokan B laite.
    - Luokan B laite: laite soveltuu käytettäväksi asuinympäristöissä ja muodostamaan suoran yhteyden pienjänniteverkkoon, joka toimii asuinkäyttöön tarkoitettujen rakennusten syöttönä.
    - Ryhmän 1 laite: Ryhmä 2 sisältää kaikki teolliset, tieteelliset ja lääkinnälliset (ISM) radiotaajuuslaitteet, joiden radiotaajuusenergia taajuusalueella 9 kHz–400 GHz on luotu tarkoituksella ja käytetty tai käytetään vain paikallisesti sähkömagneettisen säteilyn, induktiivisen ja/tai kapasitiivisen yhdistämisen muodossa materiaalin käsittelyyn, tarkastus-/analyysitarkoituksiin tai sähkömagneettisen energian siirtämiseen. Ryhmä 1 sisältää kaikki laitteet, joita ei ole luokiteltu ryhmän 2 laitteiksi.

Ελληνικά

Πληροφορίες ΗΜΣ

- Ο εξοπλισμός με ονομαστικό ρεύμα εισόδου μεγαλύτερο από 16 A και μικρότερο ή ίσο με 75 A ανά φάση συμμορφώνεται με το IEC 61000-3-12.
- Αυτή η συσκευή είναι εξοπλισμός κατηγορίας B της ομάδας 1.
    - Εξοπλισμός κατηγορίας B: Εξοπλισμός κατάλληλος για χρήση σε τοποθεσίες σε οικιστικά περιβάλλοντα και σε εγκαταστάσεις που συνδέονται άμεσα με δίκτυο τροφοδοσίας χαμηλής τάσης που τροφοδοτεί κτίρια που χρησιμοποιούνται για οικιακούς σκοπούς.
    - Εξοπλισμός ομάδας 1: Η ομάδα 2 περιλαμβάνει όλο τον βιομηχανικό, επιστημονικό και ιατρικό εξοπλισμό ραδιοσυχνοτήτων (ISM) στον οποίο η ενέργεια ραδιοσυχνοτήτων στην περιοχή συχνοτήτων από 9 kHz έως 400 GHz παράγεται σκόπιμα και χρησιμοποιείται ή χρησιμοποιείται μόνο τοπικά, με τη μορφή ηλεκτρομαγνητικής ακτινοβολίας, επαγωγικής ή/και χωρητικής σύζευξης, για την επεξεργασία υλικού, για σκοπούς επιθεώρησης/ανάλυσης ή για μεταφορά ηλεκτρομαγνητικής ενέργειας. Η ομάδα 1 περιλαμβάνει όλο τον εξοπλισμό που δεν ταξινομείται ως εξοπλισμός της ομάδας 2.

Magyar

Elektromágneses kompatibilitási (EMC) információk

- A fázisonként 16 A-nál nagyobb, de 75 A-nál kisebb vagy azzal egyenlő névleges bemeneti áramerősségű berendezéseknek meg kell felelniük az IEC 61000-3-12 szabványnak.
- Ez a készülék az 1. csoportba tartozó B osztályú berendezés.
    - B osztályú berendezés: Olyan berendezés, amely lakókörnyezetben, illetve olyan létesítményekben használható, amelyek közvetlenül csatlakoznak a lakóépületeket ellátó kisfeszültségű elektromos hálózathoz.
    - 1. csoportba tartozó berendezés: A 2. csoportba tartozik minden olyan ipari, tudományos és orvosi (ISM) rádiófrekvenciás berendezés, amelyben a 9 kHz és 400 GHz közötti frekvenciatartományban szándékosan generálnak és használnak, vagy kizárólag helyben használnak, rádiófrekvenciás energiát elektromágneses sugárzás, induktív és/vagy kapacitív csatolás formájában anyagkezelési, vizsgálati/elemzési célra, vagy elektromágneses energia átvitelére. Az 1. csoportba tartozik minden olyan berendezés, amely nem sorolható a 2. csoportba.

Latviski

EMS informācija

- Aprīkojums ar normatīvo ievades strāvu, kas pārsniedz 16 A, bet ir mazāka vai vienāda ar 75 A uz vienu fāzi, atbilst IEC 61000-3-12 prasībām.
- Šī ierīce ir 1. grupas B klases ierīce.
    - B klases aprīkojums: Aprīkojums piemērots izmantošanai apdzīvotās vidēs un telpās, kas tiešā veidā ir pieslēgtas zemsprieguma strāvas padeves tīklam, kas nodrošina elektroenerģiju ēkai mājsaimniecības vajadzībām.
    - 1. grupas aprīkojums: 2. grupā iekļauj visu ražošanas, zinātnisko un medicīnisko (ISM) RF aprīkojumu, kurā radiofrekvences enerģija atrodas frekvences diapazonā no 9 kHz līdz 400 GHz, un šī enerģija tiek ģenerēta ar nolūku un izmantota tikai lokāli elektromagnētiskās radiācijas veidā, induktīvs un/vai kapacitatīvs savienojums, materiāla apstrādei, kā arī apsekošanas/analīzes nolūkiem vai elektromagnētiskās enerģijas tālākdošanai. 1. grupā tiek iekļauts viss aprīkojums, kas nav klasificēts kā 2. grupas aprīkojums.

Lietuvių

EMC informacija

- Įranga, kurios vardinė įėjimo srovė didesnė kaip 16 A ir mažesnė arba lygi 75 A vienai fazei, turi atitikti IEC 61000-3-12.
- Šis prietaisas yra 1 grupės B klasės įranga.
    - B klasės įranga: įranga, tinkama naudoti gyvenamosiose patalpose ir įrenginiuose, tiesiogiai prijungtuose prie žemos įtampos elektros tinklo, kuris tiekia elektros energiją gyvenamiesiems pastatams.
    - 1 grupės įranga: 2 grupė apima visą pramoninę, mokslinę ir medicininę (ISM) radijo dažnių įrangą, kurioje radijo dažnių energija 9 kHz–400 GHz dažnių diapazone yra sąmoningai generuojama ir naudojama arba naudojama tik lokaliai elektromagnetinės spinduliuotės, indukcinės ir (arba) talpinės sąveikos forma medžiagų apdorojimui, tikrinimo ir analizės tikslais arba elektromagnetinės energijos perdavimui. 1 grupė apima visą įrangą, kuri nėra priskirta 2 grupei.

Македонски

Информации за EMC

- Опремата со номинална влезна струја поголема од 16 A и помала или еднаква на 75 A по фаза треба да биде во согласност со IEC 61000-3-12.
- Овој уред е опрема од класа Б од групата 1.
    - Опрема од класа Б: опремата е соодветна за користење во локации во резидентни области и во објекти што се директно поврзани на нисконапонска мрежа за напојување што напојува објекти што се користат за домување.
    - Опрема од групата 1: групата 2 ја содржи целата индустриска, научна и медицинска (ISM) радиофреквентна опрема во којашто радиофреквентната енергија во фреквентниот опсег од 9 kHz до 400 GHz наменски се генерира или се користи само локално, во форма на електромагнетно зрачење, индуктивна и/или капацитивна спрега, за третирање материјали, за инспекција/анализа или за пренос на електромагнетна енергија. Групата 1 ја содржи целата опрема што не е класифицирана како опрема од групата 2.

Crnogorski

Informacije o EMC

- Oprema sa nominalnom ulaznom strujom većom od 16 A, a manjom ili jednakom 75 A po fazi, mora biti u skladu sa standardom IEC 61000-3-12.
- Ovaj uređaj je oprema klase B grupe 1.
    - Oprema klase B: Oprema pogodna za upotrebu na lokacijama u stambenim okruženjima i u objektima direktno povezanim na niskonaponsku napojnu mrežu koja snabdijeva zgrade za domaćinstva.
    - Oprema grupe 1: Grupa 2 sadrži svu industrijsku, naučnu i medicinsku (ISM) RF opremu u kojoj se radio-frekventna energija u frekventnom opsegu od 9 kHz do 400 GHz namjerno generiše i koristi ili se koristi samo lokalno, u obliku elektromagnetnog zračenja, induktivnog i/ili kapacitivnog sprezanja, za tretman materijala, za svrhe inspekcije/analize, ili za prenos elektromagnetne energije. Grupa 1 sadrži svu opremu koja nije klasifikovana kao oprema grupe 2.

Norsk

Informasjon om elektromagnetisk kompatibilitet (EMC)

- Utstyr med nominell inngangsstrøm høyere enn 16 A og mindre enn eller lik 75 A per fase skal være i samsvar med IEC 61000-3-12.
- Denne enheten er klasse B-utstyr i gruppe 1.
    - Klasse B-utstyr: Utstyr egnet for bruk i boligområder og i bygninger som er direkte tilknyttet et lavspennings strømforsyningsnett som forsyner bygninger brukt til boligformål.
    - Gruppe 1-utstyr: Gruppe 2 omfatter alt industrielt, vitenskapelig og medisinsk (ISM) RF-utstyr der radiofrekvent energi i frekvensområdet 9 kHz til 400 GHz med hensikt genereres og brukes, eller kun brukes lokalt, i form av elektromagnetisk stråling, induktiv og/eller kapasitiv kobling, for behandling av materiale, til inspeksjon/analyseformål eller til overføring av elektromagnetisk energi. Gruppe 1 omfatter alt utstyr som ikke klassifiseres som gruppe 2-utstyr.

Português (Portugal)

Informações sobre EMC

- Os equipamentos com uma corrente nominal de entrada superior a 16 A e inferior ou igual a 75 A por fase devem cumprir a norma IEC 61000-3-12.
- Este dispositivo é um equipamento de classe B do grupo 1.
    - Equipamentos de classe B: equipamentos adequados para utilização em locais em ambientes residenciais e em estabelecimentos ligados diretamente a uma rede de energia elétrica de baixa tensão que abastece edifícios utilizados para fins domésticos.
    - Equipamentos do grupo 1: o grupo 2 contém todos os equipamentos industriais, científicos e médicos (ISM) de radiofrequência nos quais a energia de radiofrequência na gama de frequências de 9 kHz a 400 GHz é intencionalmente gerada e utilizada, ou apenas utilizada localmente, sob a forma de radiação eletromagnética, acoplamento indutivo e/ou capacitivo, para o tratamento de materiais, para fins de inspeção/análise ou para a transferência de energia eletromagnética. O grupo 1 contém todos os equipamentos que não estão classificados como equipamentos do grupo 2.

Română

Informații despre EMC

- Echipamentele cu un curent nominal de intrare mai mare de 16 A și mai mic sau egal cu 75 A per fază trebuie să respecte IEC 61000-3-12.
- Acest dispozitiv este un echipament de clasă B din grupa 1.
    - Echipament de clasă B: echipamente adecvate pentru utilizare în locații din medii rezidențiale și în unități conectate direct la o rețea de alimentare cu energie electrică de joasă tensiune care furnizează energie către clădiri utilizate în scopuri rezidențiale.
    - Echipamente din grupa 1: grupa 2 conține toate echipamentele RF industriale, științifice și medicale (ISM) în care este generată și utilizată în mod intenționat sau utilizată doar local energie de radiofrecvență în intervalul de frecvențe 9 kHz-400 GHz, sub formă de radiații electromagnetice, cuplare inductivă și/sau capacitivă, pentru tratarea materialelor, pentru inspecție/analiză sau pentru transferul de energie electromagnetică. Grupa 1 conține toate echipamentele care nu sunt clasificate ca echipamente din grupa 2.

Српски

Информације о ЕМК

- Опрема са номиналном улазном струјом већом од 16 А и мањом од или једнаком 75 А по фази мора бити у складу са стандардом IEC 61000-3-12.
- Овај уређај спада у опрему класе Б групе 1.
    - Опрема класе Б: опрема прикладна за употребу на локацијама у стамбеним окружењима и у објектима директно повезаним на нисконапонску мрежу за напајање која напаја зграде које се користе у стамбене сврхе.
    - Опрема групе 1: Група 2 обухвата сву индустријску, научну и медицинску (ISM) РФ опрему у којој се радиофреквентна енергија у фреквентном опсегу од 9 kHz до 400 GHz намерно генерише и користи или користи само локално, у облику електромагнетног зрачења, индуктивног и/или капацитивног спрезања, за обраду материјала, у сврху прегледа/анализе или за пренос електромагнетне енергије. Група 1 обухвата сву опрему која није класификована као опрема групе 2.

Slovenčina

Informácie o elektromagnetickej kompatibilite (EMC)

- Zariadenia s menovitým vstupným prúdom väčším ako 16 A a menším alebo rovným 75 A na fázu musia spĺňať požiadavky normy IEC 61000-3-12.
- Toto zariadenie je zariadenie triedy B skupiny 1.
    - Zariadenie triedy B: Zariadenia vhodné na použitie na miestach v obytnom prostredí a v prevádzkach priamo pripojených k sieti nízkeho napätia, ktorá zásobuje budovy používané na obytné účely.
    - Zariadenia skupiny 1: Skupina 2 obsahuje všetky priemyselné, vedecké a lekárske (ISM) rádiové zariadenia, v ktorých sa zámerne vytvára a používa alebo len lokálne využíva rádiofrekvenčná energia vo frekvenčnom rozsahu od 9 kHz do 400 GHz vo forme elektromagnetického žiarenia, indukčnej a/alebo kapacitnej väzby, na spracovanie materiálu, na účely kontroly/analýzy alebo na prenos elektromagnetickej energie. Skupina 1 obsahuje všetky zariadenia, ktoré nie sú klasifikované ako zariadenia skupiny 2.

Slovenščina

Informacije o elektromagnetni združljivosti

- Oprema z nazivnim vhodnim tokom, večjim od 16 A in manjšim od ali enakim 75 A na fazo, mora biti skladna s standardom IEC 61000-3-12.
- Ta naprava spada v razred B opreme skupine 1.
    - Oprema razreda B: Oprema, ki je primerna za uporabo na lokacijah v stanovanjskih okoljih in v ustanovah, ki so neposredno priključene na nizkonapetostno omrežje, s katerim se oskrbujejo zgradbe, ki se uporabljajo za stanovanjske namene.
    - Oprema skupine 1: Skupina 2 vključuje vso radiofrekvenčno (RF) industrijsko, znanstveno in medicinsko opremo (ISM), v kateri se namerno proizvaja in uporablja radiofrekvenčna energija v frekvenčnem razponu od 9 kHz do 400 GHz oziroma se uporablja samo lokalno v obliki elektromagnetnega sevanja, z induktivnim in/ali kapacitivnim spajanjem, za obdelavo materiala, za namene pregleda/analize ali za prenos elektromagnetne energije. Skupina 1 vključuje vso opremo, ki ni razvrščena kot oprema skupine 2.

Svenska

Information om elektromagnetisk kompatibilitet (EMC)

- Utrustning med en nominell ingångsström större än 16 A och mindre än eller lika med 75 A per fas ska uppfylla kraven i IEC 61000-3-12.
- Denna apparat är utrustning i klass B grupp 1.
    - Utrustning i klass B Utrustning lämplig för användning i bostadsmiljöer och i anläggningar som är direkt anslutna till ett lågspänningsnät som försörjer byggnader som används för bostäder.
    - Utrustning i grupp 1: Grupp 2 omfattar all industriell, vetenskaplig och medicinsk (ISM) RF-utrustning där radiofrekvent energi i frekvensområdet 9 kHz till 400 GHz avsiktligt genereras och används eller endast används lokalt, i form av elektromagnetisk strålning, induktiv och/eller kapacitiv koppling, för materialbehandling, för inspektions-/analysändamål eller för överföring av elektromagnetisk energi. Grupp 1 innehåller all utrustning som inte klassificeras som utrustning i grupp 2.

Türkçe

EMC Bilgileri

- Faz başına nominal giriş akımı 16 A'dan büyük ve 75 A'ya eşit veya daha düşük olan ekipman, IEC 61000-3-12 ile uyumlu olacaktır.
- Bu cihaz, 1. grup B sınıfı ekipmandır.
    - B sınıfı ekipman: Konut ortamlarındaki konumlarda ve evsel amaçlar için kullanılan binalara sağlanan bir düşük gerilim güç kaynağı şebekesine doğrudan bağlı işletmelerde kullanıma uygun ekipman.
    - 1. grup ekipman: 2. grup, 9 kHz ila 400 GHz frekans aralığındaki radyo frekans enerjisinin kasıtlı olarak üretildiği ve kullanıldığı veya yalnızca yerel olarak malzemenin işlenmesi, inceleme/analiz amaçları veya elektromanyetik enerji için elektromanyetik radyasyon, indüktif ve/veya kapasitif birleşme şeklinde kullanıldığı tüm endüstriyel, bilimsel ve tıbbi (ISM) RF ekipmanlarını içerir. 1. grup, 2. grup ekipman olarak sınıflandırılmayan tüm ekipmanları içerir.

Українська

Інформація про електромагнітну сумісність

- Обладнання з номінальним вхідним струмом більшим ніж 16 A і не більшим ніж 75 A на фазу має відповідати стандарту IEC 61000-3-12.
- Цей пристрій належить до обладнання класу B групи 1.
    - Обладнання класу B. Обладнання, яке є придатним для використання в житлових приміщеннях і установах, безпосередньо під'єднаних до низьковольтної електромережі, яка живить будівлі, що використовуються в побутових цілях.
    - Обладнання групи 1. До групи 2 належить усе радіочастотне обладнання промислового, наукового й медичного призначення (ISM), у якому радіочастотна енергія в діапазоні частот від 9 кГц до 400 ГГц навмисно генерується та використовується або застосовується лише локально у вигляді електромагнітного випромінювання, індуктивного й/або ємнісного зв'язку з метою обробки матеріалів, контролю/аналізу або для передачі електромагнітної енергії. До групи 1 належить усе обладнання, яке не віднесено до групи 2.

Huawei Technologies Co., Ltd.
Huawei Industrial Base, Bantian, Longgang
Shenzhen 518129 People's Republic of China
solar.huawei.com